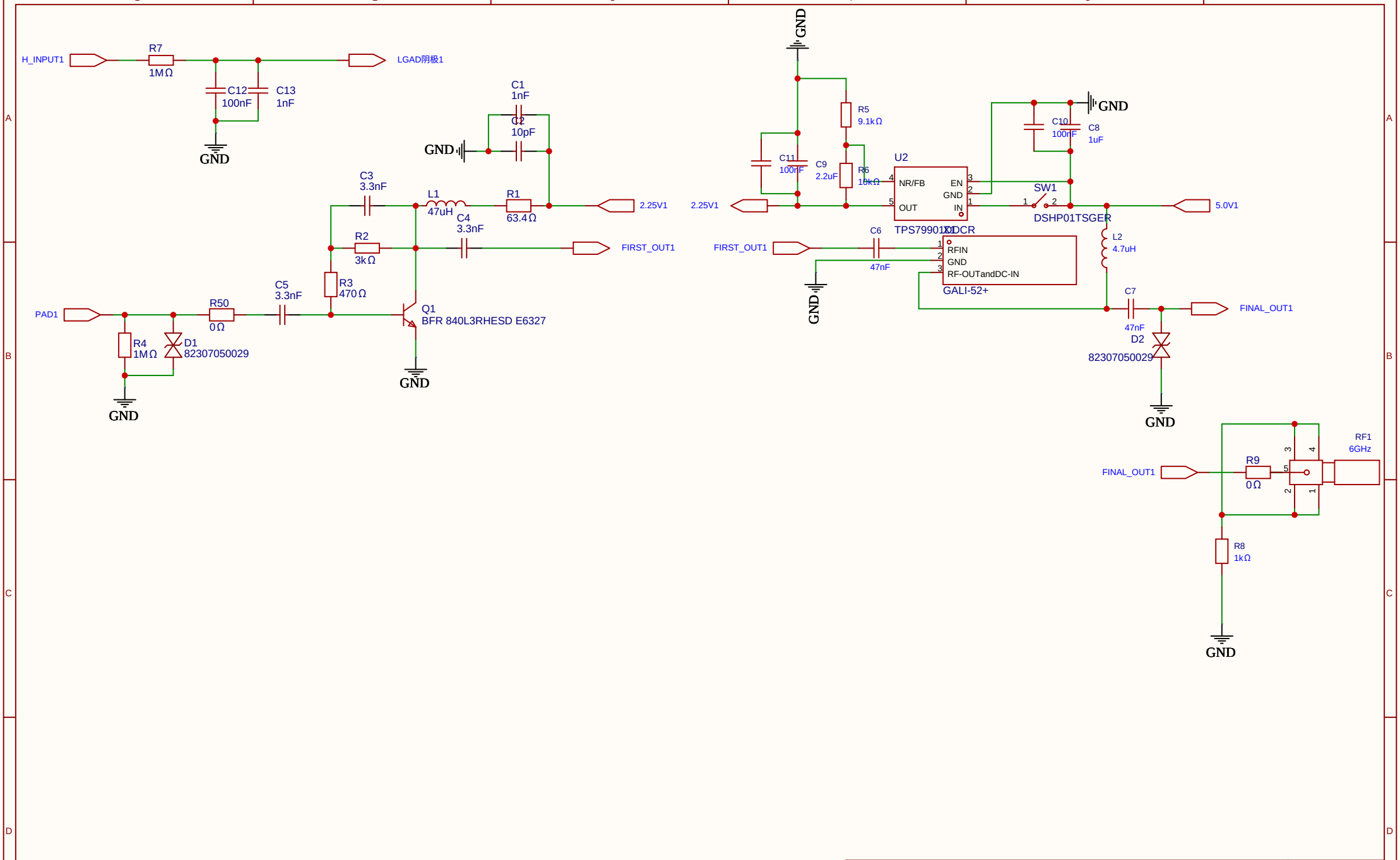

TITLE: LGAD前放板_final		REV: 1.0
嘉立创EDA	Company: Your Company	Sheet: 1/1
	Date: 2026-06-20 Drawn By: eda_wnnbjhnb	