Probing Higgs Width and Top Quark Yukawa Coupling

Yandong Liu
Peking University
2016-08-22
Collaboration with Qing-Hong Cao and Shao-Long Chen
(1602.01934)

Higgs is special

- Higgs is important not only for EWSB but also a window to new physics.

Before Higgs discovery :

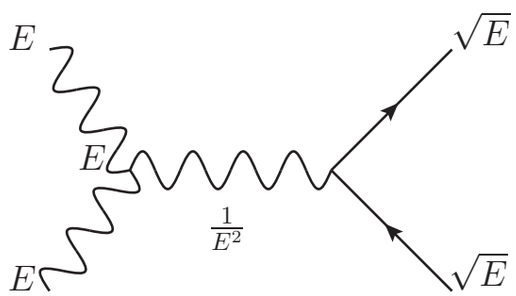

E^2

$P-$ wave

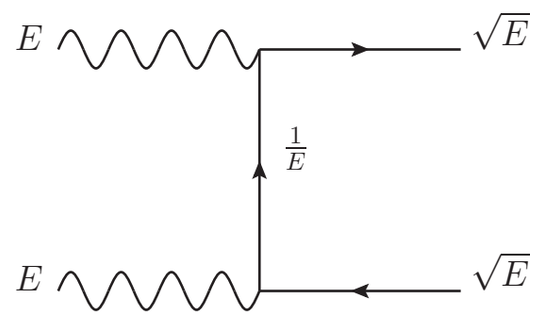

E^2

$S, P-$ wave

Unitarity

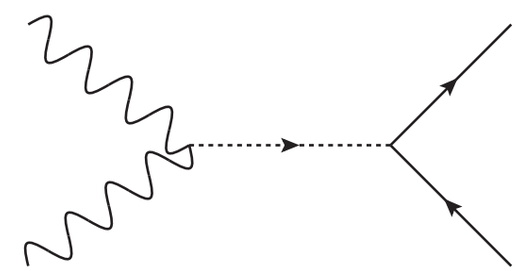

spin $-$ 0

After Higgs discovery :

Higgs precision measurement

1)The unitarity

2)New physics scale

Higgs precision : top quark Yukawa coupling

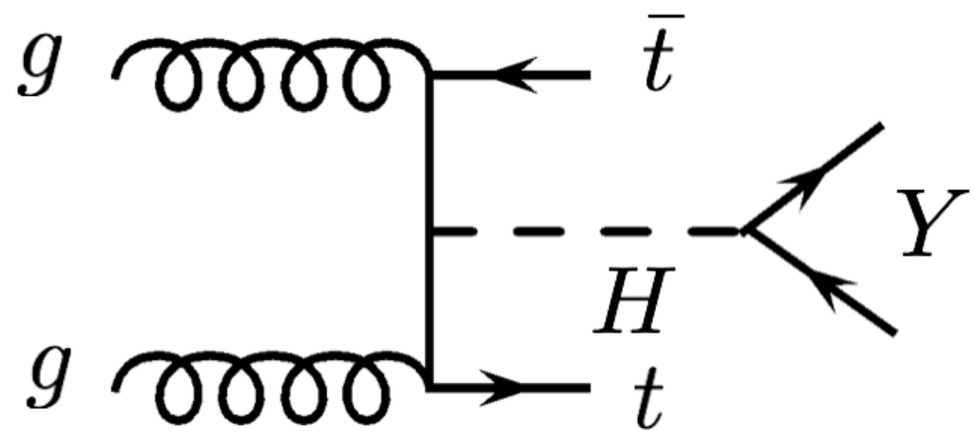

$$\hat{\sigma} = \sigma(gg \to t\bar{t}H) \times \frac{\Gamma(H \to Y)}{\Gamma^{\text{total}}} = \frac{\kappa_t^2 \kappa_Y^2}{\Gamma^{\text{total}}/\Gamma^{\text{total}}_{\text{SM}}} \hat{\sigma}_{\text{SM}}$$

$$\mu \equiv \frac{\hat{\sigma}}{\hat{\sigma}_{\text{SM}}} = \frac{\kappa_t^2 \kappa_Y^2}{\Gamma^{\text{total}}/\Gamma^{\text{total}}_{\text{SM}}} \xrightarrow[\kappa_Y = 1]{\Gamma^{\text{total}} = \Gamma^{\text{total}}_{\text{SM}}} \mu = \kappa_t^2$$

ATLAS-CONF-2015-007

ttH production [21–23]	
$H \to b\bar{b}$: single-lepton, dilepton	$\mu < 3.4$ (2.2)
$ttH \to$multileptons: categories on lepton multiplicity	$\mu < 4.7$ (2.4)
$H \to \gamma\gamma$: leptonic, hadronic	$\mu < 6.7$ (4.9)

Can we measure top quark Yukawa coupling without any assumptions?

Higgs precision : Higgs width

Higgs On-Shell production: $\sigma \sim \frac{g_{ggh}^2 \, g_{hzz}^2}{m_h \, \Gamma_h}$ F. Caola & K. Melnikov (2013)

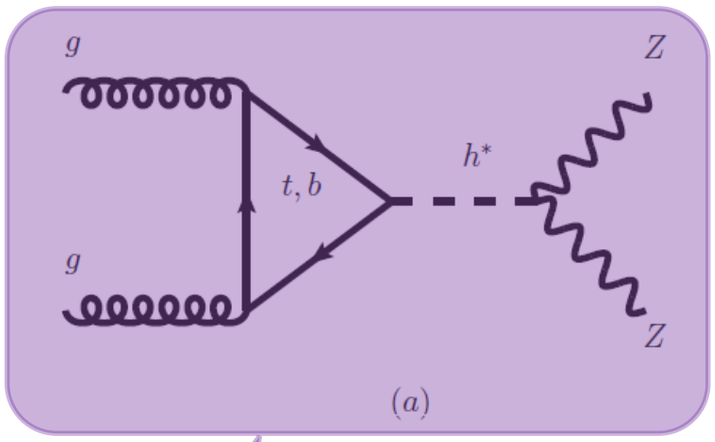

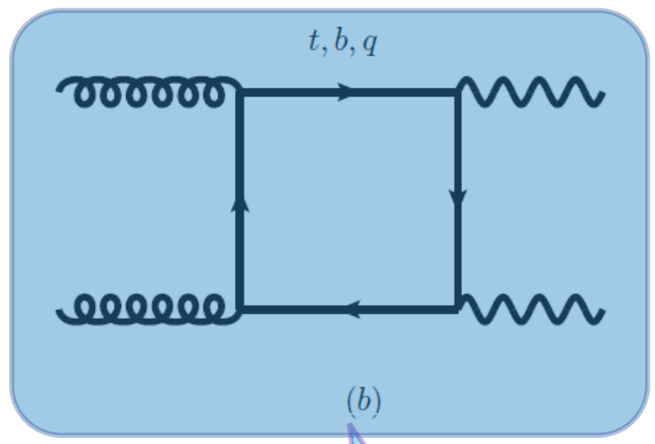

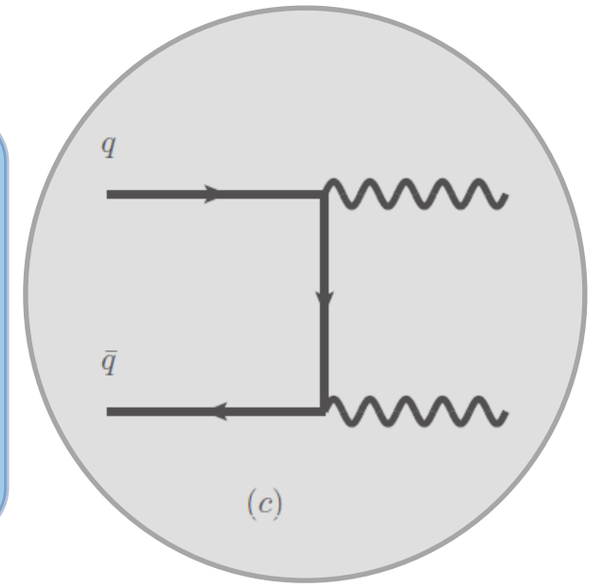

Signal for Higgs production

Background for Higgs production

dominant SM background

Higgs off-Shell production: $\frac{d\sigma}{dM_{ZZ}^2} \sim \frac{g_{ggh}^2 g_{hZZ}^2}{\left(M_{ZZ}^2 - m_h^2\right)^2} |M_1|^2 + \frac{g_{ggh} g_{hZZ}}{\left(M_{ZZ}^2 - m_h^2\right) M_{ZZ}^2} |M_1 \, M_2^*|$

$\Gamma^{\text{total}} \leq 13$ MeV [1605.02329]

Can we measure Higgs boson width alternatively?

Can we measure top quark Yukawa coupling without any assumptions?

Can we measure Higgs boson width alternatively?

Four Top Quarks and $t\bar{t}h$ production

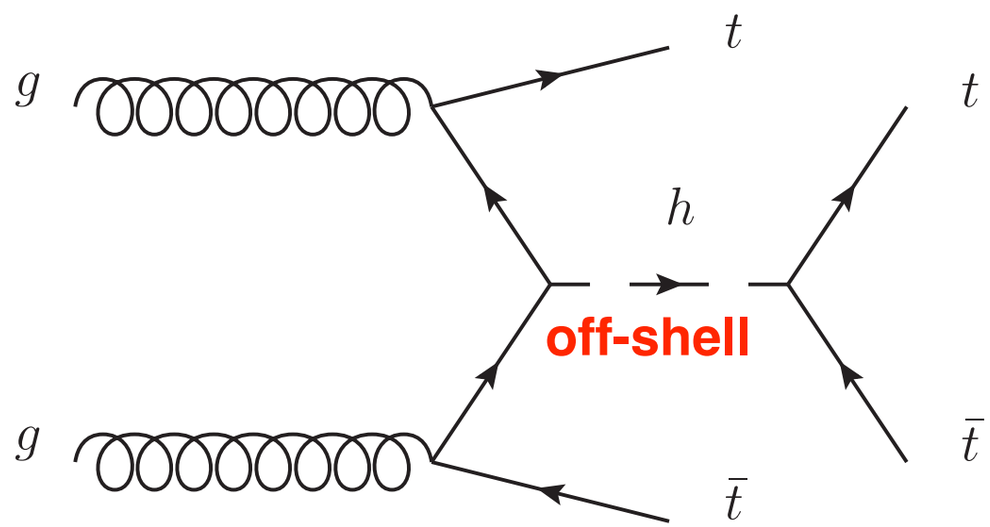

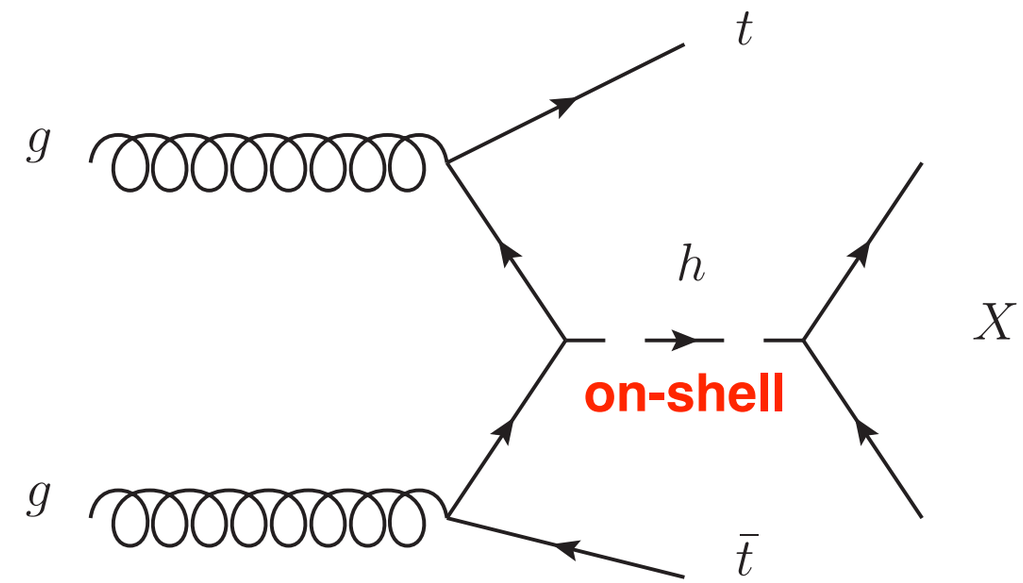

$$\hat{\sigma}(pp \to t\bar{t}h \to t\bar{t}t\bar{t})$$
$$\propto \kappa_t^4 \hat{\sigma}(pp \to t\bar{t}h \to t\bar{t}t\bar{t})^{\rm SM}$$

$$\hat{\sigma}(pp \to t\bar{t}h \to t\bar{t}X)$$
$$\propto \frac{\kappa_t^2 \kappa_X^2}{\Gamma_h^{\rm total}/\Gamma_h^{\rm total\ SM}} \hat{\sigma}(pp \to t\bar{t}h \to t\bar{t}X)^{\rm SM}$$
$$\propto \mu_{t\bar{t}h}^X \hat{\sigma}(pp \to t\bar{t}h \to t\bar{t}X)^{\rm SM}$$

$$X = \gamma\gamma, \mu^+\mu^-, ZZ^*$$

$$\overline{\mu}_{t\bar{t}h}^{\gamma\gamma} = 1.00 \pm 0.38\ , \quad \overline{\mu}_{t\bar{t}h}^{ZZ} = 1.00 \pm 0.49\ ,$$ ATLAS-PHYS-PUB-2014-016

$$\overline{\mu}_{t\bar{t}h}^{\mu\mu} = 1.00 \pm 0.74\ , \quad \overline{\mu}_{t\bar{t}h}^{\rm comb} = 1.00 \pm 0.30$$ 14TeV LHC, 300fb^{-1}

Two Scenarios

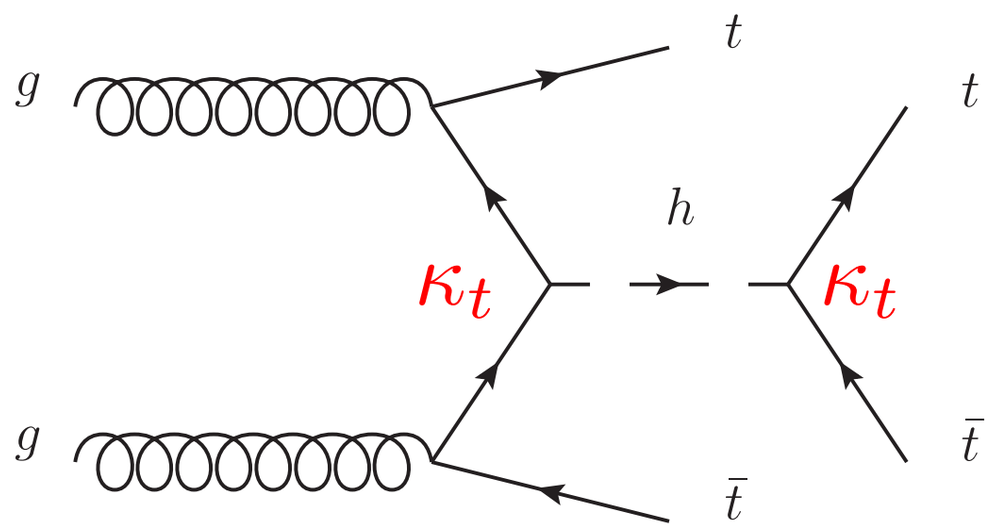

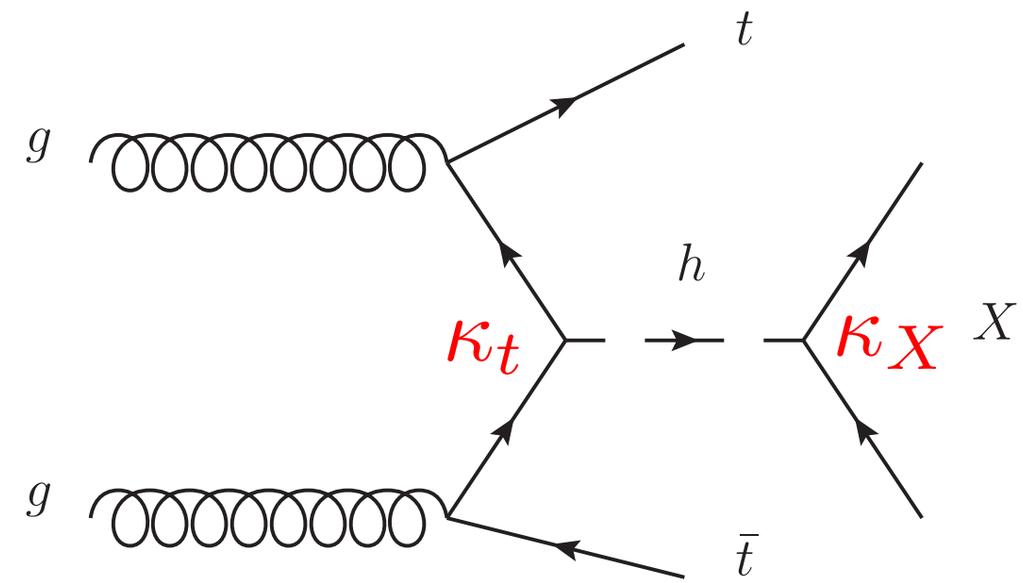

$$\hat{\sigma}(pp \to t\bar{t}t\bar{t}) \propto \kappa_t^4$$

$$\mu_{t\bar{t}h}^{X} \equiv \frac{\kappa_t^2 \kappa_X^2}{\Gamma_h^{\text{total}}/\Gamma_h^{\text{total SM}}} = \frac{\kappa_t^2 \kappa_X^2}{R_\Gamma}$$

1) $\Gamma_h \simeq \Gamma_h^{\text{SM}}$

Rare modes $(\gamma\gamma, \mu^+\mu^-)$

$$\kappa_t^2 \kappa_X^2 = \overline{\mu}_{t\bar{t}h}^{X}$$

2) $\kappa_X \sim 1$

Predominant modes (*ZZ*)

$$\frac{\kappa_t^2}{R_\Gamma} = \overline{\mu}_{t\bar{t}h}^{X}$$

Measuring κ_{t} from Four Top Quarks Production

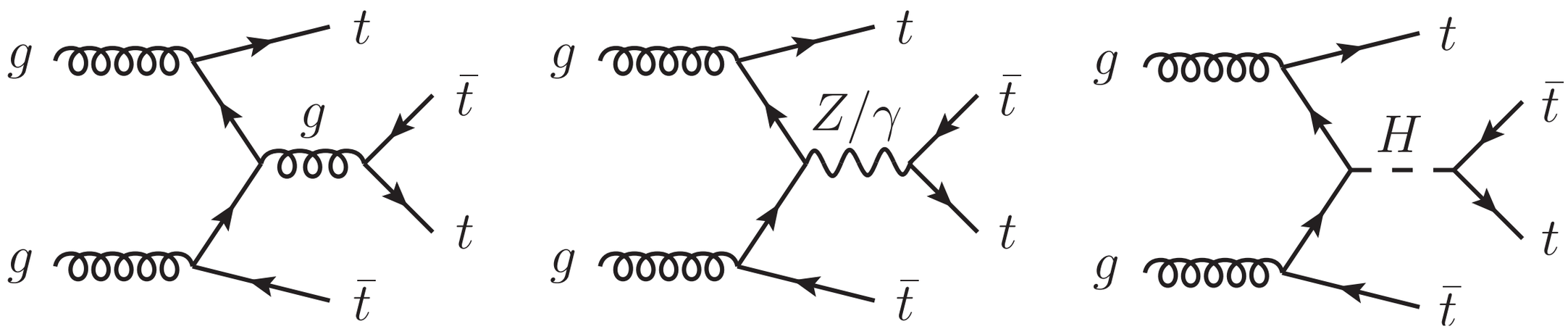

$$\sigma(t\bar{t}t\bar{t}) = \sigma^{\mathrm{SM}}(t\bar{t}t\bar{t})_{g+Z/\gamma} + \kappa_t^2 \sigma_{\mathrm{int}}^{\mathrm{SM}} + \kappa_t^4 \sigma^{\mathrm{SM}}(t\bar{t}t\bar{t})_H$$

	8 TeV	14 TeV
$\sigma^{\mathrm{SM}}(t\bar{t}t\bar{t})_{g+Z/\gamma}$:	1.344 fb,	13.140 fb
$\sigma^{\mathrm{SM}}(t\bar{t}t\bar{t})_H$:	0.171 fb,	1.515 fb
$\sigma^{\mathrm{SM}}(t\bar{t}t\bar{t})_{\mathrm{int}}$:	−0.224 fb,	−2.007 fb

Collider Simulation

Event Topology: same-sign charged leptons plus multi-jet (b-jet)

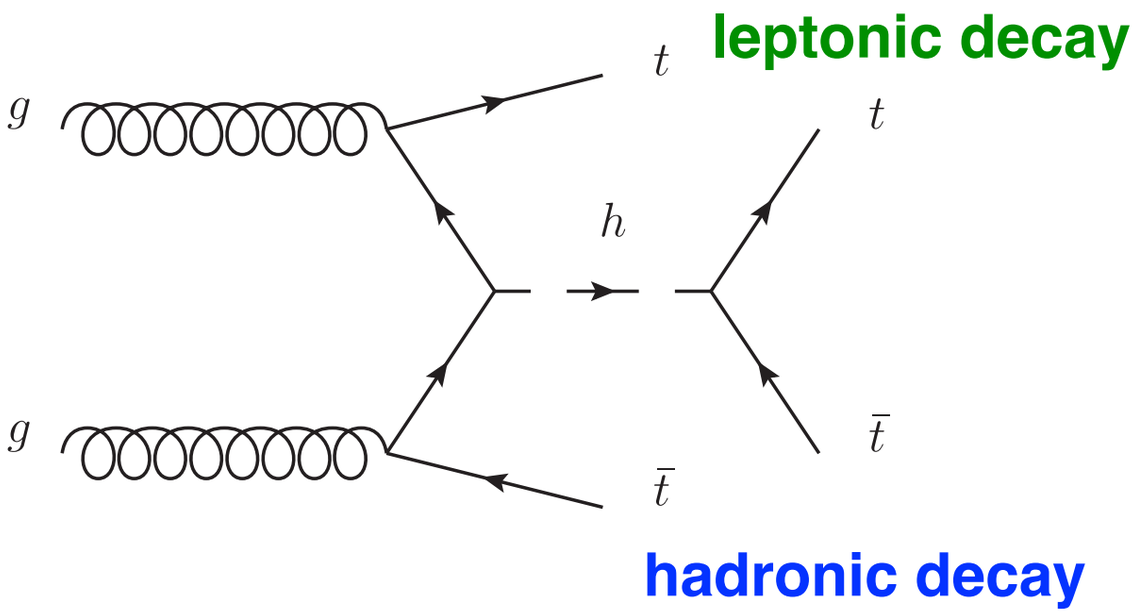

Backgrounds:

$$t\bar{t}Z/W,\ W^{\pm}W^{\pm}jj,\ t\bar{t}$$

Event selection:

$$p_T^{j,l} \geq 20\ \text{GeV}, |\eta^{j,l}| < 2.5,$$
$$N_{l^{\pm}} = 2,$$
$$N_{\text{jets}} \geq 5, N_{b-\text{jets}} \geq 3,$$
$$\not{E}_T \geq 100\ \text{GeV},$$
$$m_T \geq 100\ \text{GeV},$$
$$H_T \geq 700\ \text{GeV}.$$

$$\kappa_t \leq 1.94\ @\ 14\ \text{TeV LHC}\ \mathcal{L} = 100\ \text{fb}^{-1}$$

$$\kappa_t \leq 1.34\ @\ 14\ \text{TeV LHC}\ \mathcal{L} = 300\ \text{fb}^{-1}$$

Scenario I : $\kappa_t^2 \kappa_X^2 = \overline{\mu}_{t\bar{t}h}^{X}$

$$\Gamma^{\text{total}} = \Gamma^{\text{total}}_{\text{SM}}$$

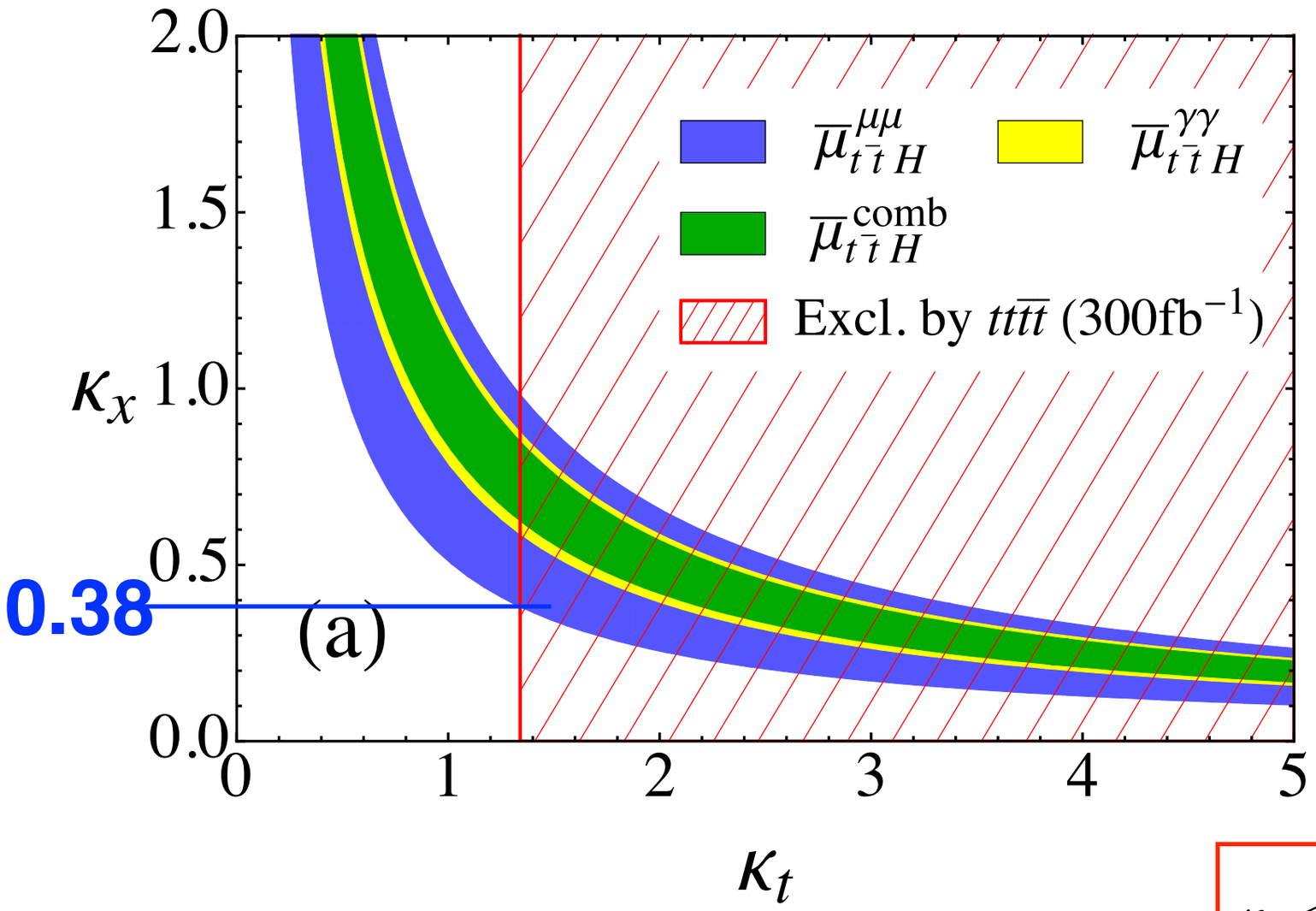

rare decay modes

$$\kappa_{\mu\mu} \geq 0.38$$

$$\kappa_{\gamma\gamma} \geq 0.59$$

Lower Limit

$$\kappa_t \leq 1.94 \text{ @ 14 TeV LHC } \mathcal{L} = 100 \text{ fb}^{-1}$$

$$\kappa_t \leq 1.34 \text{ @ 14 TeV LHC } \mathcal{L} = 300 \text{ fb}^{-1}$$

$$\overline{\mu}_{t\bar{t}h}^{\gamma\gamma} = 1.00 \pm 0.38 \ , \quad \overline{\mu}_{t\bar{t}h}^{ZZ} = 1.00 \pm 0.49 \ ,$$

$$\overline{\mu}_{t\bar{t}h}^{\mu\mu} = 1.00 \pm 0.74 \ , \quad \overline{\mu}_{t\bar{t}h}^{\text{comb}} = 1.00 \pm 0.30$$

Scenario II : $\dfrac{\kappa_t^2}{R_\Gamma} = \overline{\mu}_{t\bar{t}h}$ $\qquad \kappa_X \simeq 1$

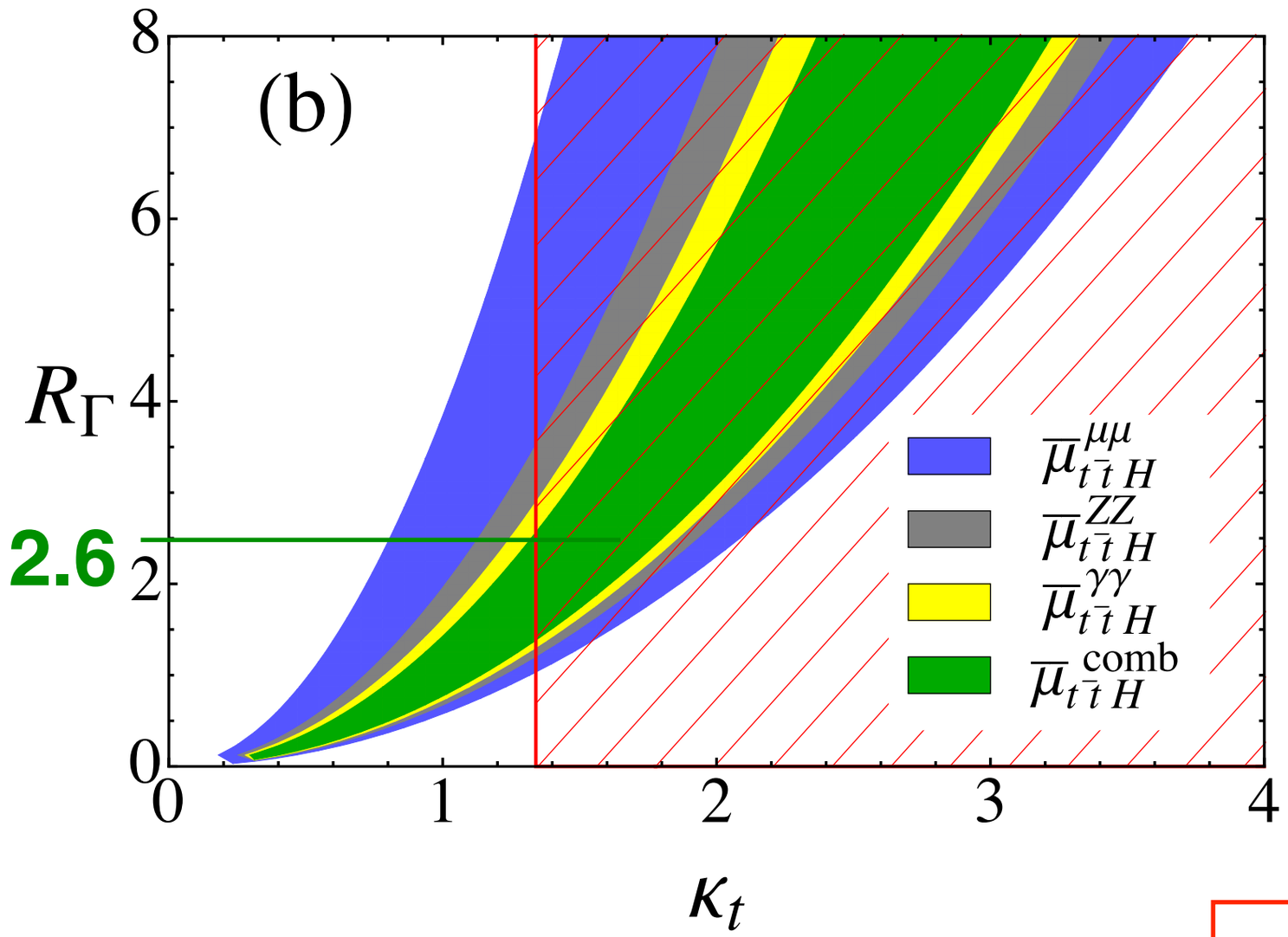

$\Gamma_{\rm total} \leq 2.6\Gamma^{\rm total}_{\rm SM}$

Upper Limit

$$\overline{\mu}^{\gamma\gamma}_{t\bar{t}h} = 1.00 \pm 0.38 \ , \quad \overline{\mu}^{ZZ}_{t\bar{t}h} = 1.00 \pm 0.49 \ ,$$
$$\overline{\mu}^{\mu\mu}_{t\bar{t}h} = 1.00 \pm 0.74 \ , \quad \overline{\mu}^{\rm comb}_{t\bar{t}h} = 1.00 \pm 0.30$$

$\kappa_t \leq 1.94$ @ 14 TeV LHC $\mathcal{L} = 100$ fb^{-1}

$\kappa_t \leq 1.34$ @ 14 TeV LHC $\mathcal{L} = 300$ fb^{-1}

Potential at the 100 TeV SppC

$$\frac{\kappa_t^2}{R_\Gamma} = \overline{\mu}_{t\bar{t}h} \quad \kappa_b = 1$$

FCC-HH report, 1606.09408

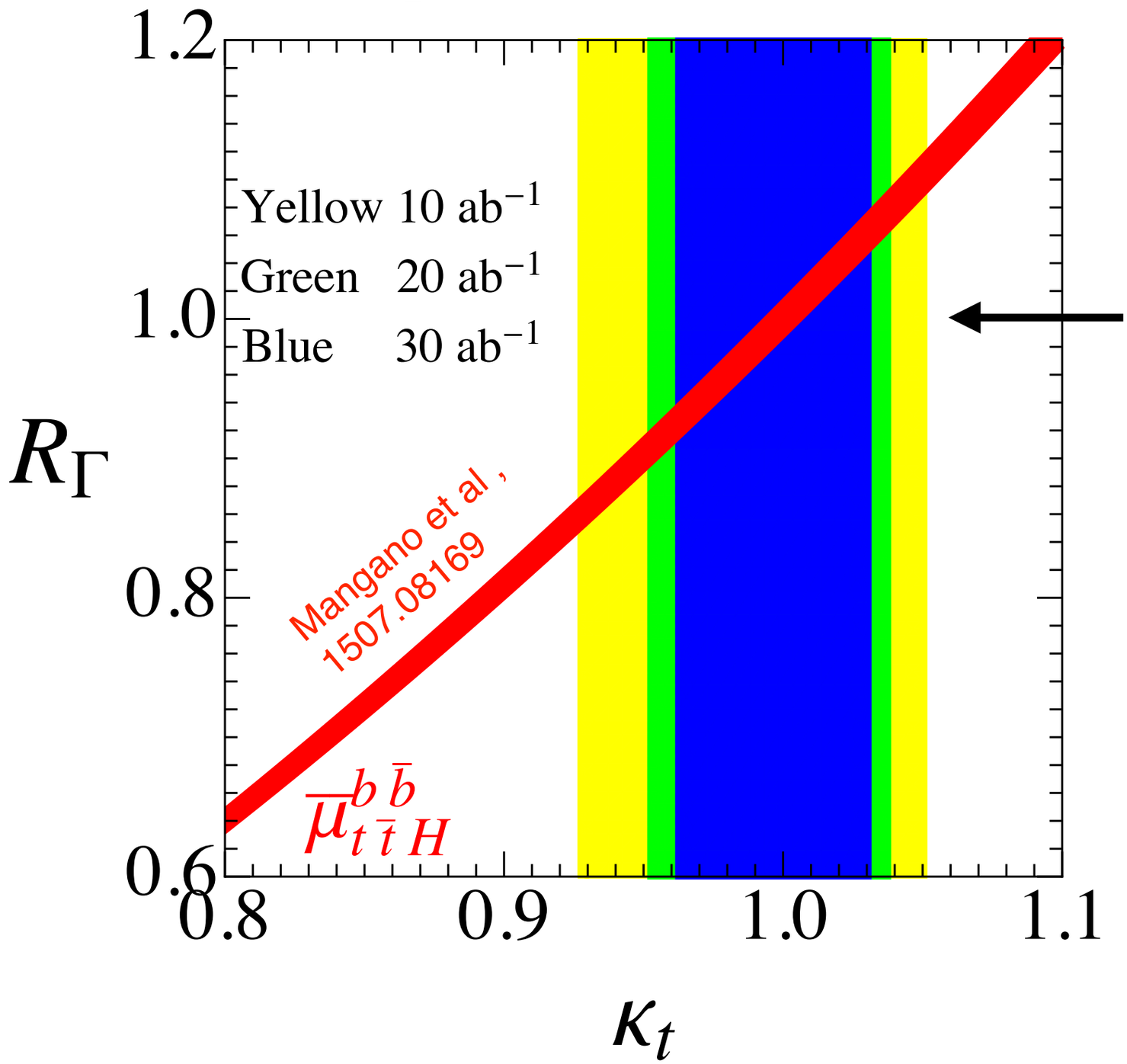

Four-top prod. reaches 5sigma discovery with an integrated luminosity of 9fb^{-1} .

Top Yukawa coupling precision: stat. uncertainty only

$$\mathcal{L} = 10 \text{ ab}^{-1}$$

$$0.85\ \Gamma_{\rm H}^{\rm SM} \leq \Gamma_{\rm H} \leq 1.12\ \Gamma_{\rm H}^{\rm SM}$$

$$0.927 \leq \kappa_t \leq 1.051$$

$$\mathcal{L} = 30 \text{ ab}^{-1}$$

$$0.91\ \Gamma_{\rm H}^{\rm SM} \leq \Gamma_{\rm H} \leq 1.08\ \Gamma_{\rm H}^{\rm SM}$$

$$0.962 \leq \kappa_t \leq 1.031$$

Summary

- The four top quarks production can constrain the top quark Yukawa coupling without any assumptions on the Higgs boson width, couplings, etc.

- Combining four top quarks production and tth production could constrain
  ➡ Higgs couplings to muon or photons
  ➡ Higgs width

Thank you!

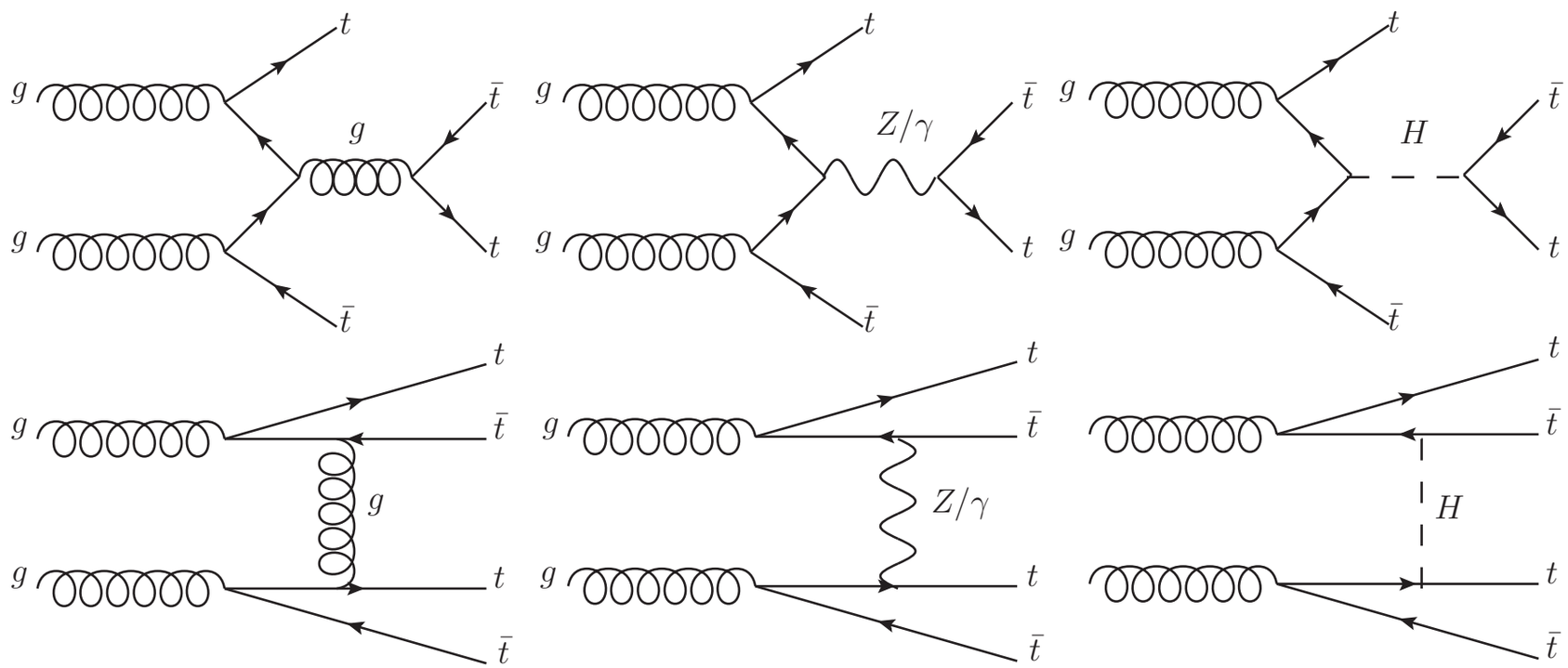

$$\sigma(t\bar{t}t\bar{t}) = \sigma^{\rm SM}(t\bar{t}t\bar{t})_{g+Z/\gamma} + \kappa_t^2 \sigma^{\rm SM}_{\rm int} + \kappa_t^4 \sigma^{\rm SM}(t\bar{t}t\bar{t})_H$$

	8 TeV	14 TeV
$\sigma^{\rm SM}(t\bar{t}t\bar{t})_{g+Z/\gamma}$:	1.344 fb,	13.140 fb
$\sigma^{\rm SM}(t\bar{t}t\bar{t})_H$:	0.171 fb,	1.515 fb
$\sigma^{\rm SM}(t\bar{t}t\bar{t})_{\rm int}$:	−0.224 fb,	−2.007 fb