Measurement of J/psi leptonic widths with the KEDR detector

Andrey Shamov

Budker Institute of Nuclear Physics, KEDR/VEPP-4M

Outline: $\Gamma_{ee} \times \Gamma_{\ell\ell}/\Gamma$ and $\Gamma_{\ell\ell}$ measurements

Introduction

- The leptonic width and the total width of J/ψ–meson are its fundamental characteristics providing us with the important information on the interaction of c–quarks.
- Study of the $e^+e^- \to J/\psi \to \ell^+\ell^-$ cross section as function of energy allows one to determine the leptonic width $\Gamma_{\ell\ell}$ and its product to the decay ratio $\Gamma_{ee} \times \Gamma_{\ell\ell}/\Gamma$ thus the total width Γ can be also found
  - high accuracy for $\Gamma_{ee} \times \Gamma_{\mu\mu}/\Gamma$ (peak cross section)
  - low accuracy for Γ_{ee} (interference effect)
- $B(J/\psi \to \ell^+\ell^-) = \Gamma_{\ell\ell}/\Gamma$ is known with accuracy of 0.7% from the cascade decay $\psi(2S) \to J/\psi\ \pi^+\pi^-$
- We report the results of high precision measurements
  - $\Gamma_{ee} \times \Gamma_{ee}/\Gamma$ (PHIPSI'08)
  - $\Gamma_{ee} \times \Gamma_{\mu\mu}/\Gamma$ (new result)
- Measured values of Γ_{ee} and $\sqrt{\Gamma_{ee}\Gamma_{\mu\mu}}$ are used to check the analysis consistency

On vacuum polarization treatment in $e^+e^- \to J/\psi \to \ell^+\ell^-$

- Consensus in the experimental data analysis
  - $\Gamma_{ee} \times \Gamma_{\mu\mu}/\Gamma$ by BaBar(2004), CLEO(2006)
  - $\Gamma_{ee} \times \Gamma_{ee}/\Gamma$ by KEDR(PHIPSI'08)

$$\sigma^{ee\to J/\psi\to\ell^+\ell^-} \propto \frac{\Gamma_{ee}\Gamma_{\ell\ell}}{\Gamma}$$

$\Gamma_{\ell\ell}$ – "experimental" partial width recommended to use by PDG

$\Gamma^0_{\ell\ell}$ – lowest order QED value

$$\Gamma_{\ell\ell} \equiv B_{ll(n\gamma)} \times \Gamma = \frac{\Gamma^{(0)}_{\ell\ell}}{|1-\Pi_0|^2} \qquad \text{(Y.-S. Tsai, 1983)}$$

$B_{ll(n\gamma)}$ – branching ratio as it is measured in experiments

Π_0 – vacuum polarization excluding J/ψ contribution

- Sec. 8.2.4 of the review "Heavy Quarkonium Physics" (2005)

$$\sigma^{ee\to J/\psi\to\ell^+\ell^-} \propto \frac{\Gamma_{ee}\Gamma^{(0)}_{\ell\ell}}{\Gamma} = \frac{\Gamma^{(0)}_{ee}\Gamma_{\ell\ell}}{\Gamma}$$

On vacuum polarization treatment in $e^+e^- \to J/\psi \to \ell^+\ell^-$

Single-photon annihilation cross section according to Kuraev, Fadin (1985):

$$\sigma(s) = \int dx \, \frac{\sigma_0((1-x)s)}{|1-\Pi((1-x)s)|^2} \, f(s,x)$$

$\sigma_0(s)$ – Born level cross section, $\Pi(s)$ – vacuum polarization

Sec. 8.2.4 of "Heavy Quarkonium Physics":

$$\frac{12\pi\,\Gamma^0_{ee}\,\Gamma^0_{\ell\ell}}{(s-M^2)^2+M^2\Gamma^2} \Rightarrow \sigma_0, \quad \Pi_0 \Rightarrow \Pi(s)$$

one of the two $\Gamma^{(0)}$ survives!

Actually (thanks to V.S. Fadin for clarification):

$$\Pi = \Pi_0 + \Pi_R(s), \quad \Pi_R(s) = \frac{3\Gamma^0_{ee}}{\alpha}\frac{s}{M_0}\frac{1}{s-M_0^2+iM_0\Gamma_0}$$

M_0, Γ_0 – "bare" resonance parameters, $\Pi_0 = \Pi_{ee}+\Pi_{\mu\mu}+\Pi_{\tau\tau}+\Pi_{q\bar{q}}$

$$\sigma_0^{ee\to ll} = \frac{4\pi\alpha}{3s} = -\frac{4\pi\alpha}{s}\,\mathrm{Im}\,\Pi_{\ell\ell} \quad (ll = ee, \mu\mu)$$

On vacuum polarization treatment in $e^+e^- \to J/\psi \to \ell^+\ell^-$

- KF's formula with "bare" resonance parameters gives the cross section without separation to the continuum, resonant and interference parts
- To obtain the resonance contribution the continuum one must be subtracted from the amplitude

$$\frac{1}{1-\Pi_0-\Pi_R(s)} \equiv \frac{1}{1-\Pi_0} + \frac{1}{(1-\Pi_0)^2}\,\frac{3\Gamma^0_{ee}}{\alpha}\,\frac{s}{M_0}\,\frac{1}{s-\tilde{M}^2+i\tilde{M}\tilde{\Gamma}}$$

$$\tilde{M}^2 = M_0^2 + \frac{3\Gamma^0_{ee}}{\alpha}\,\frac{s}{M_0}\,\mathrm{Re}\,\frac{1}{1-\Pi_0}\,,$$

$$\tilde{M}\tilde{\Gamma} = M_0\Gamma_0 - \frac{3\Gamma^0_{ee}}{\alpha}\,\frac{s}{M_0}\,\mathrm{Im}\,\frac{1}{1-\Pi_0}$$

- The narrow resonance in e^+e^-, $\mu^+\mu^-$ and $q\bar{q}$ channels can be described by the Breit-Wigner amplitude with "dressed" parameters $M \approx \tilde{M}(M_0^2)$ and $\Gamma \approx \tilde{\Gamma}(M_0^2)$ $\qquad$ ($M-M_0 \simeq 1$ MeV for J/ψ)
- The resonance contribution in these channels has the factor of $1/(1-\Pi_0)^2$ in the amplitude for the two intermediate photons.

On vacuum polarization treatment in $e^+e^- \to J/\psi \to \ell^+\ell^-$

- The same "line shape" in the gluonic channels with
$$\sigma_0^{ee\to ggg,gg\gamma}(s) = -\frac{4\pi\alpha}{s}\,\mathrm{Im}\,\Pi_R(s),$$
the amplitude has the factor of $1/(1-\Pi_0)$ in this case.

- Got three types of "Feynman diagrams" for e^+e^- annihilation

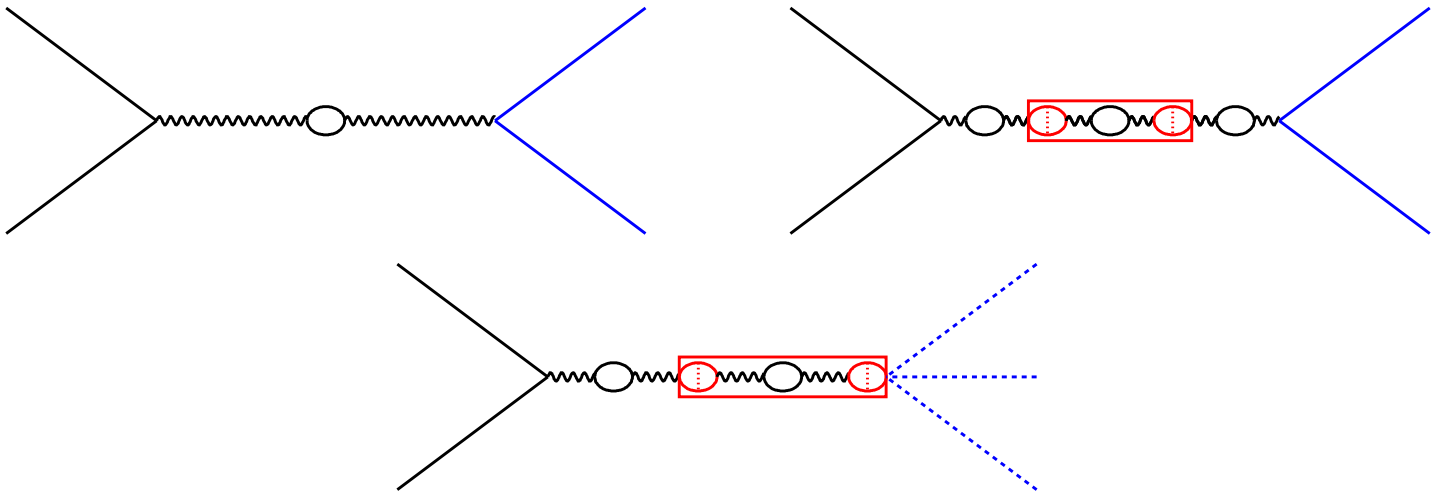

considered in Tsai's paper

- No needs to reanalyze the experimental results!

Calculation of $\sigma^{e^+e^-\to J/\psi\to\ell^+\ell^-}(W)$

- Analytical expressions for radiative correction integral in the soft photon approximation was first obtained in
  Ya.I. Azimov *et al.* JETP Lett. 21 (1975) 172
- With some up-today modifications for $\mu^+\mu^-$ channel

$$\left(\frac{d\sigma}{d\Omega}\right)^{ee\to\mu\mu} = \left(\frac{d\sigma}{d\Omega}\right)^{ee\to\mu\mu}_{\text{QED}} + \frac{3}{4M^2}\left(1+\cos^2\theta\right)\times$$

$$(1+\delta_{sf})\left\{\frac{3\Gamma_{ee}\Gamma_{\mu\mu}}{\Gamma M}\text{Im}\,\mathcal{F} - \frac{2\alpha\sqrt{\Gamma_{ee}\Gamma_{\mu\mu}}}{M}\,\text{Re}\,\frac{\mathcal{F}}{1-\Pi_0}\right\}$$

$$\delta_{sf} = \frac{3}{4}\beta + \frac{\alpha}{\pi}\left(\frac{\pi^2}{3}-\frac{1}{2}\right) + \beta^2\left(\frac{37}{96}-\frac{\pi^2}{12}-\frac{L}{72}\right), \quad L = \ln\left(W^2/m_e^2\right),$$

$$\beta = \frac{4\alpha}{\pi}\left(\ln\frac{W}{m_e}-\frac{1}{2}\right), \qquad \mathcal{F} = \frac{\pi\beta}{\sin\pi\beta}\left(\frac{M/2}{-W+M-i\Gamma/2}\right)^{1-\beta}$$

δ_{sf} – from the structure function approach by Kuraev and Fadin
$\mathcal{F}()$ – from the integration over the radiated energy on the complex plain

Calculation of $\sigma^{e^+e^-\to J/\psi\to\ell^+\ell^-}(W)$

- For e^+e^- channel

$$\left(\frac{d\sigma}{d\Omega}\right)^{ee\to ee} = \left(\frac{d\sigma}{d\Omega}\right)^{ee\to ee}_{\text{QED}} + \frac{1}{M^2}\left\{\frac{9}{4}\frac{\Gamma^2_{ee}}{\Gamma M}(1+\cos^2\theta)\,(1+\delta_{sf})\,\text{Im}\,\mathcal{F} - \frac{3\alpha}{2}\frac{\Gamma_{ee}}{M}\left[(1+\cos^2\theta) - \frac{(1+\cos^2\theta)^2}{(1-\cos\theta)}\right]\text{Re}\,\frac{\mathcal{F}}{1-\Pi_0}\right\}$$

accuracy of the interference term $\simeq\beta$ is sufficient for our analysis

- $\sigma^{ee\to ee}_{\text{QED}}$ and $\sigma^{ee\to\mu\mu}_{\text{QED}}$ have to be calculated with MC generators
- Final state radiation must be simulated for the resonance production
- Numerical convolution with the collision energy distribution

$$\rho(W) = \frac{1}{\sqrt{2\pi}\,\sigma_W}\exp\left\{-\frac{(W-W_{beam})^2}{2\sigma_W^2}\right\}$$

VEPP–4M collider

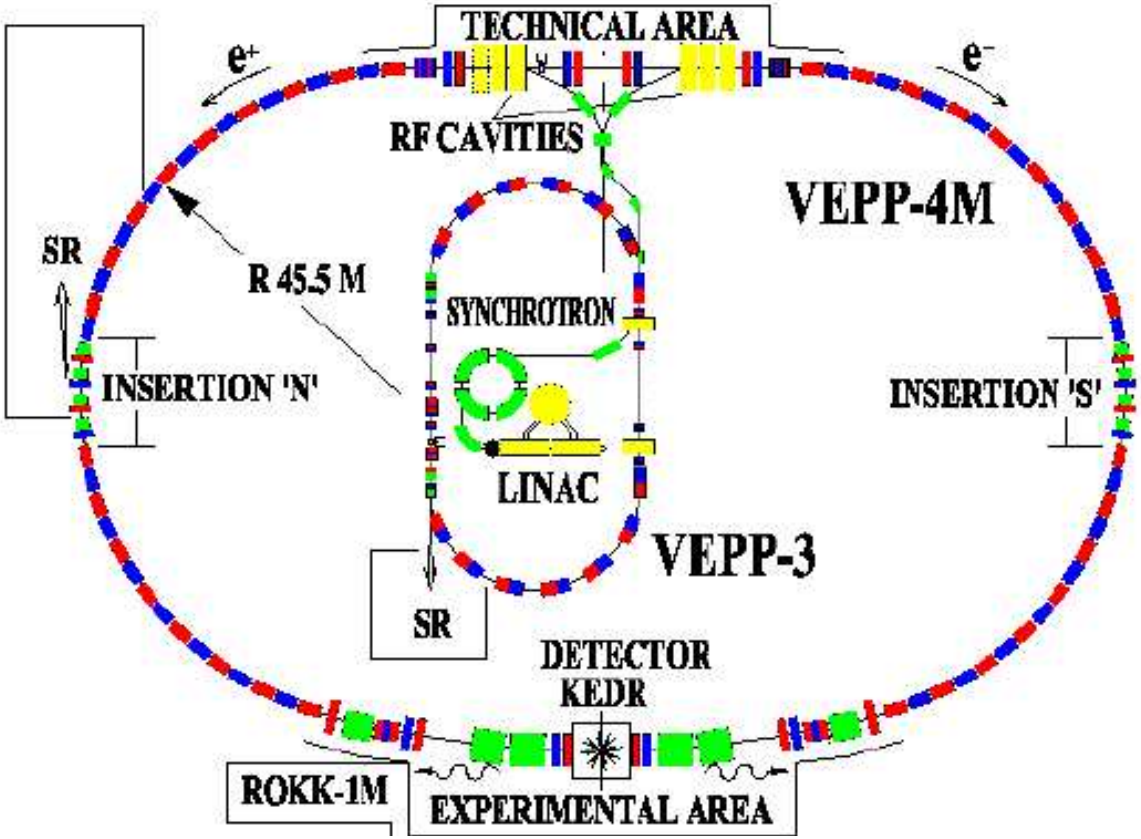

- Wide energy range $E_{beam} \simeq 1 \div 6$ GeV
- Peak luminosity 1.5×10^{30} at J/ψ
- Precise beam energy determination:
  - Resonant Depolarization Method, $\sigma_E \approx 1.5$ keV
    - interpolation for DAQ runs $\sigma_E = 8 \div 30$ keV
  - IR-light Compton BackScattering, $\sigma_E \lesssim 100$ keV

KEDR detector

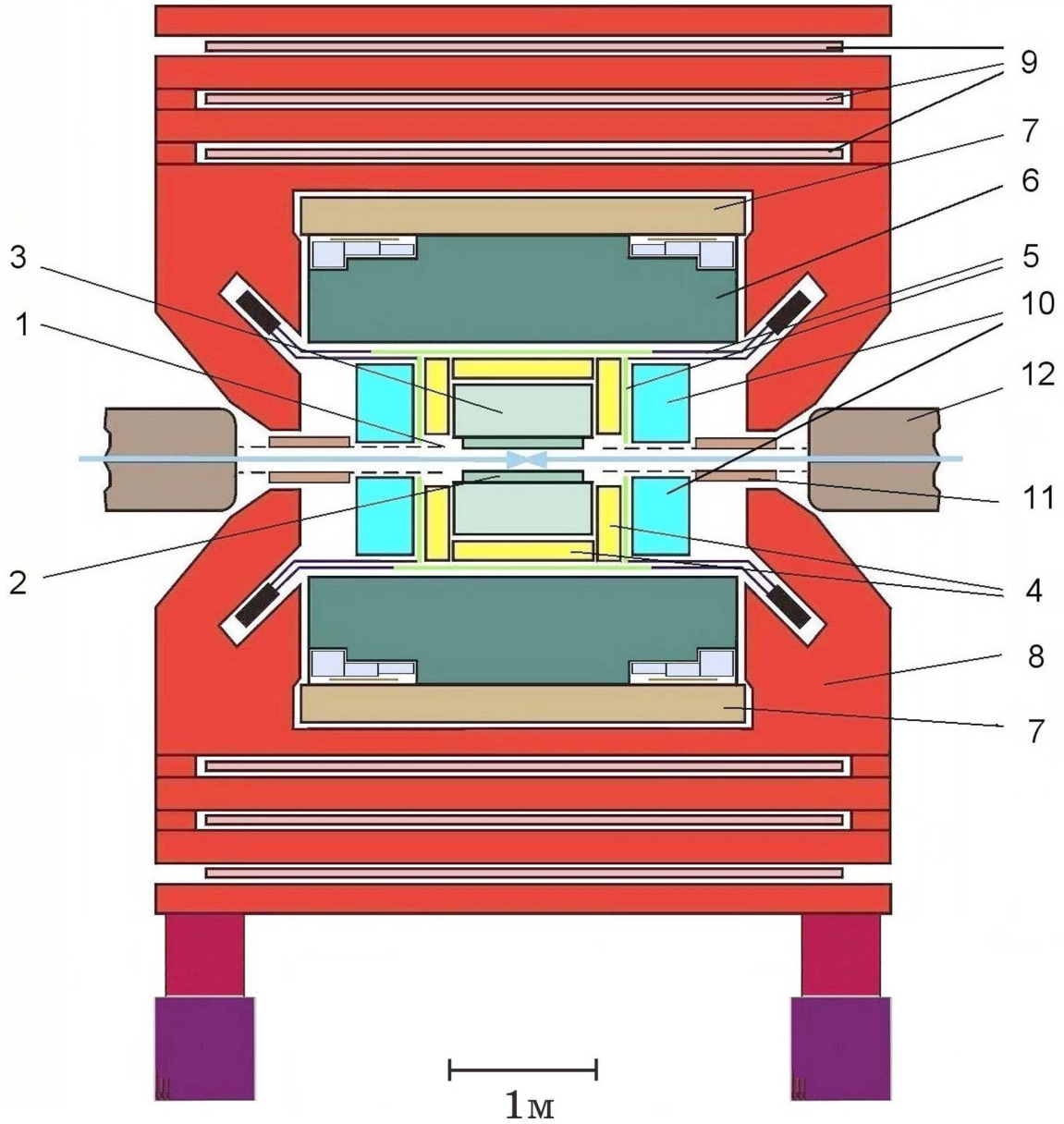

1. Vacuum chamber
2. Vertex detector
3. Drift chamber
4. Threshold aerogel counters
5. ToF–counters
6. Liquid krypton calorimeter
7. Superconducting coil (0.65 T)
8. Magnet yoke
9. Muon tubes
10. CsI-calorimeter
11. Compensation solenoid
12. VEPP–4M quadrupole

- Luminosity monitoring by single Bremsstrahlung in e^+ and e^- directions
- Scattering electron tagging system for two-photon studies

Description of the experiment

- 11-point scan of J/ψ

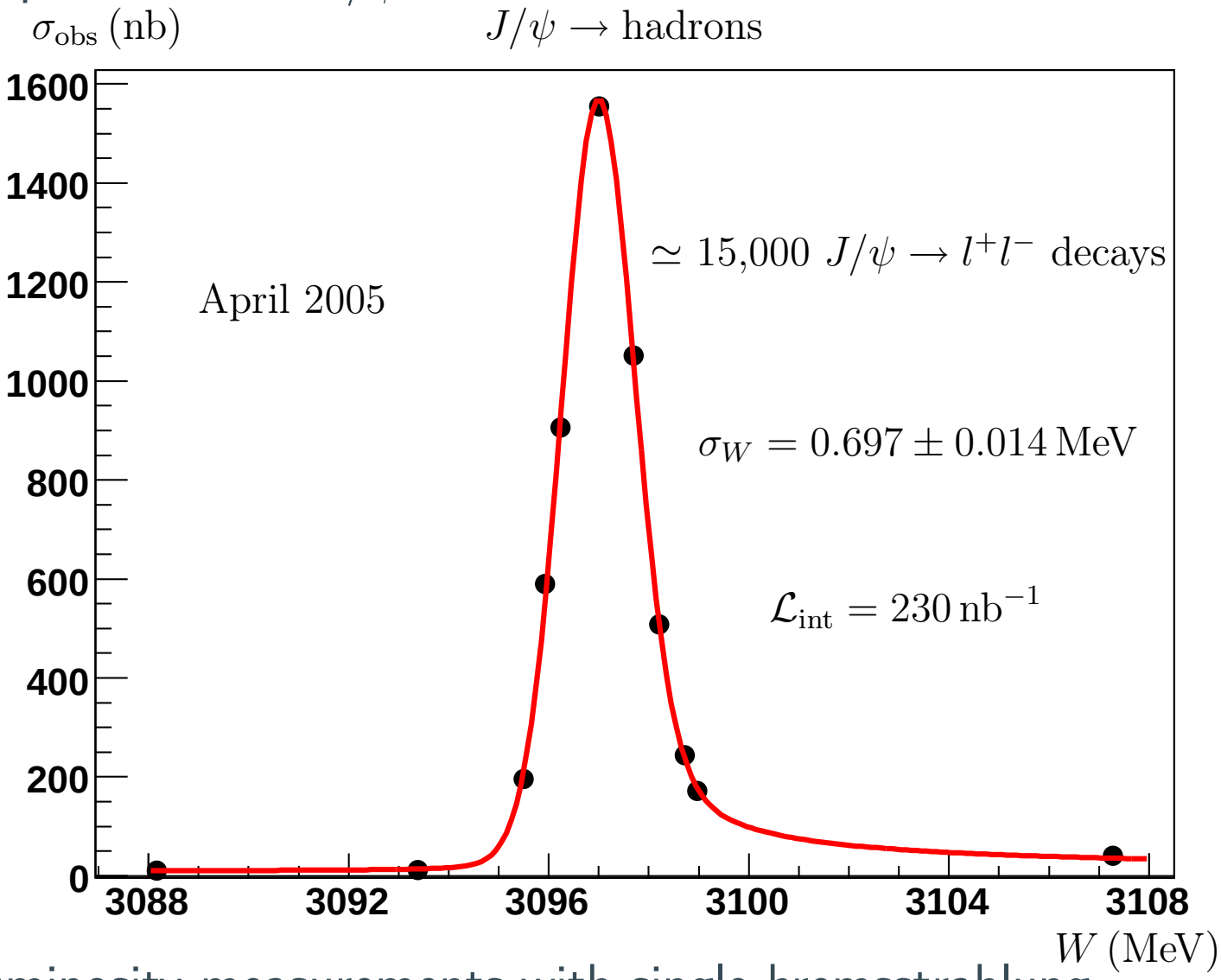

- Luminosity measurements with single bremsstrahlung, point-to-point stability $\simeq$ 1%

$\Gamma_{ee} \times \Gamma_{ee}/\Gamma$ analysis

- Event selection:
  - Exactly two tracks of opposite charges with continuation in EMC
  - Vertex in the interaction region
  - EMC: $E_1, E_2 > 0.7$ GeV, $E_1 + E_2 > 2$ GeV, $(E_1 + E_2)/E_{tot} > 0.95$
  - Acollinearity $|\Delta\phi|, |\Delta\theta| < 40^\circ$
  - Fiducial volume cut $\theta > 40^\circ$

- 2D-fit: 11 energy points $\times$ n angular bins ($n = 4 \div 16$)

$$N_{\text{exp}}(E_i, \theta_j) = \mathcal{R}_{\mathcal{L}} \times \mathcal{L}(E_i) \times \Big(\sigma_{\text{peak}}(E_i, \theta_j) \cdot \epsilon_{\text{peak}}(E_i, \theta_j) + \\ + \sigma_{\text{inter}}(E_i, \theta_j) \cdot \epsilon_{\text{inter}}(E_i, \theta_j) + \sigma_{\text{Bhabha}}(E_i, \theta_j) \cdot \epsilon_{\text{Bhabha}}(E_i, \theta_j)\Big)$$

  - $\mathcal{L}(E_i)$ – luminosity by single bremsstrahlung
  - $\sigma_{\text{peak}} \cdot \epsilon_{\text{peak}}$, $\sigma_{\text{inter}} \cdot \epsilon_{\text{inter}}$ – trivial MC generators + FSR with PHOTOS
  - $\sigma_{\text{Bhabha}} \cdot \epsilon_{\text{Bhabha}}$ – BHWIDE and MCGPJ event generators
- Free parameters:
  - $\mathcal{R}_{\mathcal{L}}$ – absolute luminosity calibration $\times$ efficiency correction
  - $\sigma_{\text{peak}} \cdot \epsilon_{\text{peak}} \propto \Gamma_{ee} \times \Gamma_{ee}/\Gamma$ – main result
  - $\sigma_{\text{inter}} \cdot \epsilon_{\text{inter}} \propto \Gamma_{ee}$ – "nuance parameter"

$\Gamma_{ee} \times \Gamma_{ee}/\Gamma$ analysis

- Fit picture (4 angular bins):

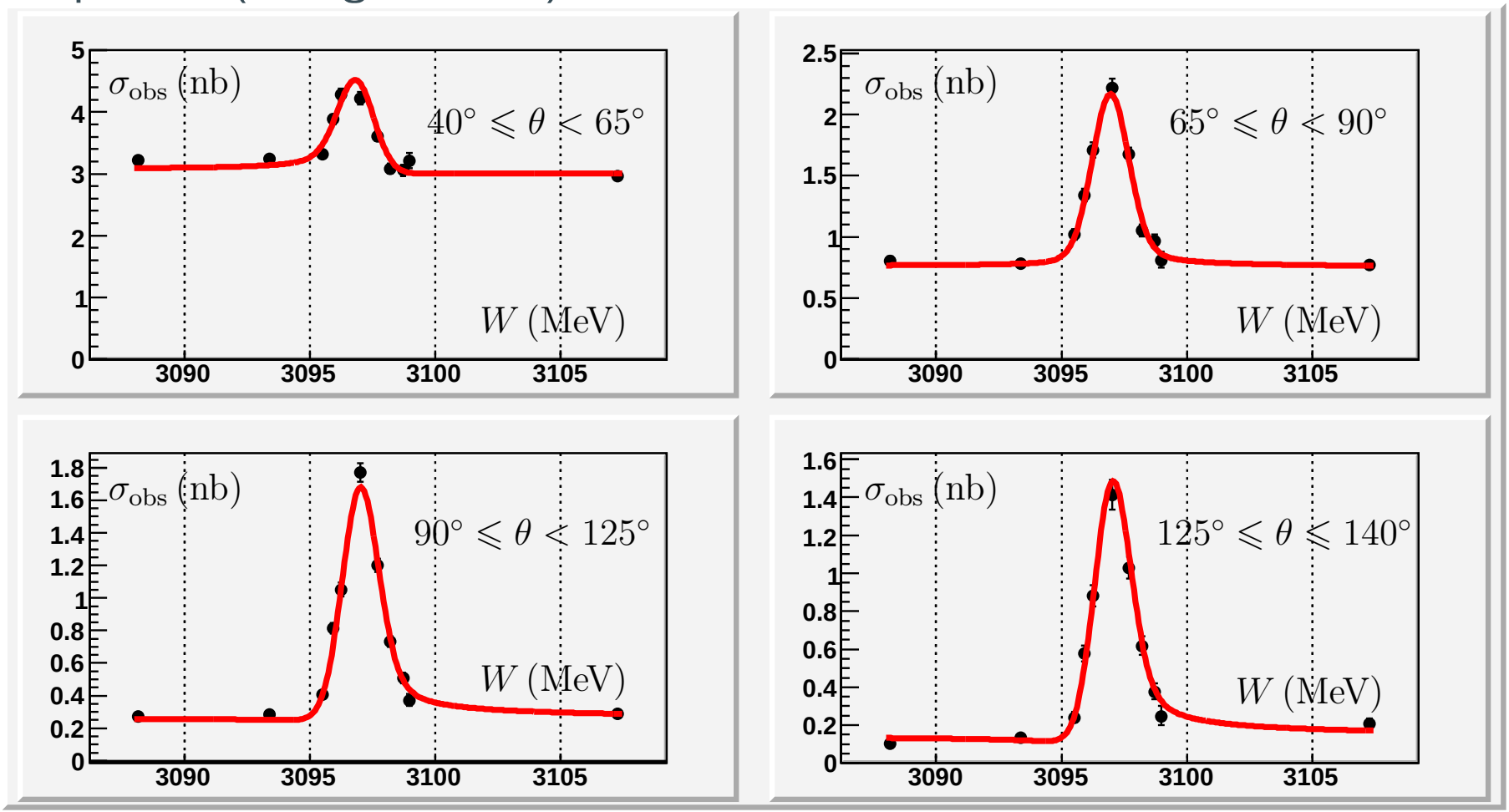

- Fit results (10 angular bins):

$$\Gamma_{ee} \times \Gamma_{ee}/\Gamma = 0.3324 \pm 0.0064 \ \text{(stat.) keV}$$

$$\Gamma_{ee} = 5.7 \pm 0.7 \ \text{(stat.) keV} \quad \mathcal{R}_{\mathcal{L}} = 93.4 \pm 0.7 \ \text{(stat.)\%}$$

$\Gamma_{ee} \times \Gamma_{ee}/\Gamma$ analysis

- Detection efficiency correction ($\simeq$70% of total event sample)
  - Select events with EMC calorimeter "only" $\Rightarrow \epsilon^{exp}_{track}/\epsilon^{sim}_{track}(\theta)$
  - Select events with tracking system "only" $\Rightarrow \epsilon^{exp}_{EMC}/\epsilon^{sim}_{EMC}(\theta)$

$$\delta\mathcal{R}_{\mathcal{L}} = 1.7\%, \;\; \delta\Gamma_{ee} \times \Gamma_{ee}/\Gamma = 0.75 \pm 0.63 \;\; (\text{stat.}) \pm 0.5 \;\; (\text{syst.})\%$$

- List of systematic uncertainties:

Systematic uncertainty source	Error, %
Luminosity monitor instability	0.8
Offline event selection	0.7
Trigger efficiency	0.5
Energy spread accuracy	0.2
Beam energy measurement (10–30 keV)	0.3
Fiducial volume cut	0.2
Calculation of radiative correction	0.3
Cross section for Bhabha (MC generators)	0.4
Uncertainty in the final state radiation (PHOTOS)	0.4
Background from J/ψ decays	0.2
Fitting procedure	0.2
Quadratic sum	*1.4*

- Final result:

$$\Gamma_{ee} \times \Gamma_{ee}/\Gamma = 0.3323 \pm 0.0064 \;\; (\text{stat.}) \pm 0.0048 \;\; (\text{syst.}) \text{ keV}$$

$\Gamma_{ee} \times \Gamma_{\mu\mu}/\Gamma$ analysis

- Event selection:
  - Exactly two tracks of opposite charges with continuation in EMC
  - Vertex in the interaction region
  - EMC: $60 < E_1, E_2 < 500$ MeV, $E_1+E_2 < 750$ MeV, $(E_1+E_2)/E_{tot} > 0.7$
  - Acollinearity $|\Delta\phi < 15^\circ$, $|\Delta\theta| < 10^\circ$
  - Fiducial volume cut $\theta > 40^\circ$, minimal TOF system requirements
- 1D-fit: 11 energy points

$$N_{\text{exp}}(E_i) = \mathcal{R}_{\mathcal{L}}^{e^+e^-} \times \mathcal{L}(E_i) \times \Big(\sigma_{\text{peak}}(E_i)\cdot\epsilon_{\text{peak}}(E_i) + \\ + \sigma_{\text{inter}}(E_i)\cdot\epsilon_{\text{inter}}(E_i) + \sigma_{\text{cont}}(E_i)\cdot\epsilon_{\text{cont}}(E_i)\Big) + F_{cosmic} \times t_{live}$$

  - $\mathcal{R}_{\mathcal{L}}^{e^+e^-} \times \mathcal{L}(E_i)$ – corrected luminosity by single bremsstrahlung
  - $\sigma_{\text{peak}}\cdot\epsilon_{\text{peak}}$, $\sigma_{\text{inter}}\cdot\epsilon_{\text{inter}}$ – trivial MC generators + FSR with PHOTOS
  - $\sigma_{\text{cont}}\cdot\epsilon_{\text{cont}}$ – Berends and MCGPJ event generators
  - t_{live} - data taking time
- Free parameters:
  - $\sigma_{\text{peak}}\cdot\epsilon_{\text{peak}} \propto \Gamma_{ee} \times \Gamma_{ee}/\Gamma$ – main result
  - $\sigma_{\text{inter}}\cdot\epsilon_{\text{inter}} \propto \sqrt{\Gamma_{ee}\Gamma_{\mu\mu}}$ – "nuance parameter"
  - F_{cosmic} – cosmic event rate

$\Gamma_{ee} \times \Gamma_{\mu\mu}/\Gamma$ analysis

- Fit picture:

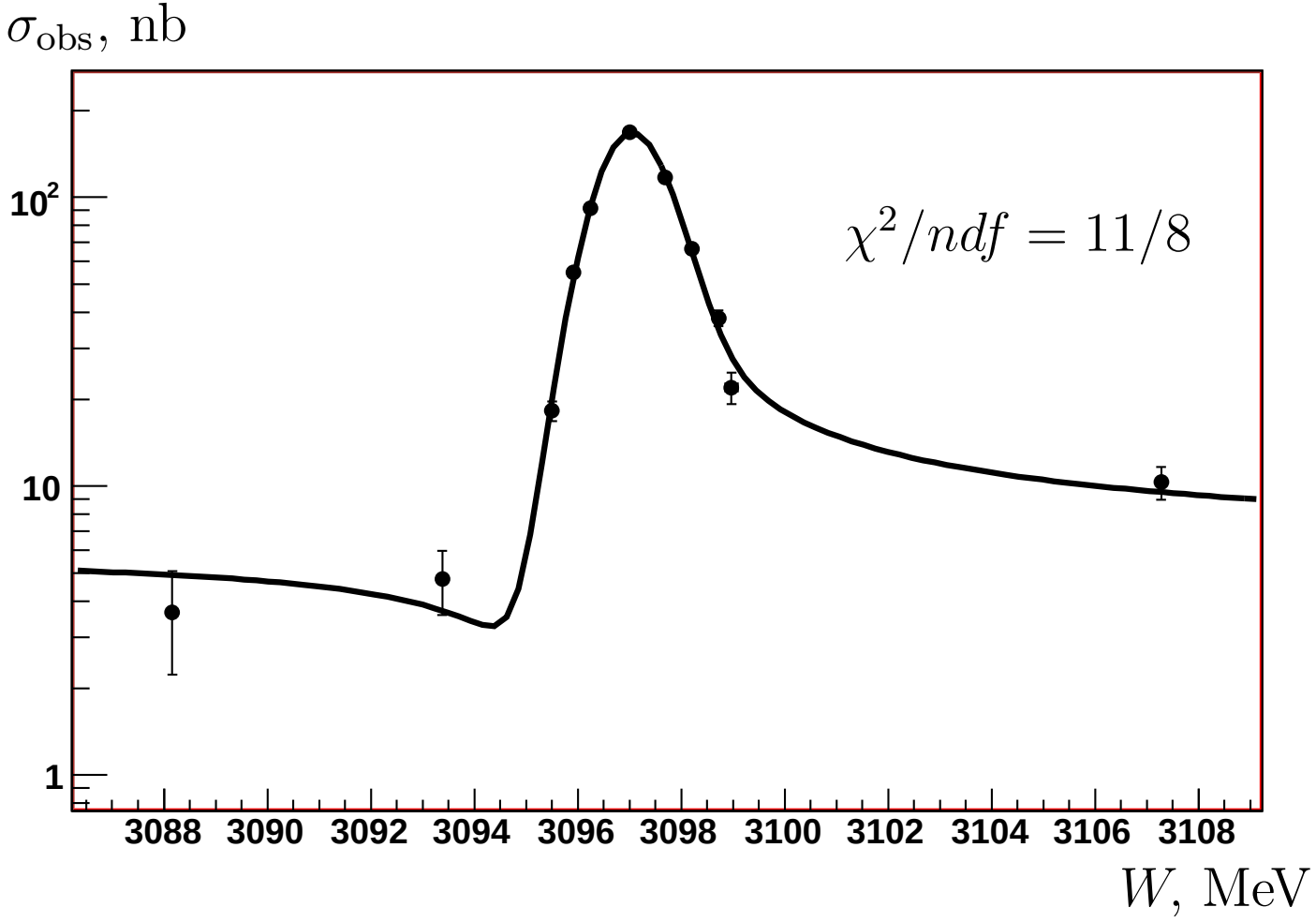

- Fit results: $\Gamma_{ee} \times \Gamma_{\mu\mu}/\Gamma = 0.3318 \pm 0.0052$ (stat.) keV

$$\sqrt{\Gamma_{ee}\Gamma_{\mu\mu}} = 5.6 \pm 0.7 \text{ (stat.) keV}$$

$\Gamma_{ee} \times \Gamma_{\mu\mu}/\Gamma$ analysis

- Correction to efficiency difference for e^+e^- and $\mu^+\mu^-$ events ($\simeq$65% of total event sample)
  - Select events reconstructing single track with a kink, separate e^+e^- and $\mu^+\mu^-$ events using EMC

$$\left(\epsilon^{\text{exp}}_{\mu\mu}/\epsilon^{\text{sim}}_{\mu\mu}\right) \Big/ \left(\epsilon^{\text{exp}}_{ee}/\epsilon^{\text{sim}}_{ee}\right) = 1.005 \pm 0.005\,(\text{stat.}) \pm 0.008\,(\text{syst.}).$$

- List of systematic uncertainties:

Systematic uncertainty source	Error, %
Absolute luminosity calibration by e^+e^- data	1.2
Luminosity monitor instability	0.8
Trigger efficiency	0.5
Energy spread accuracy	0.4
Beam energy measurement (10–30 keV)	0.5
Fiducial volume cut	0.2
Calculation of radiative correction	0.2
Uncertainty in the final state radiation (PHOTOS)	0.5
Background from J/ψ decays	0.6
Cosmic ray background	0.1
Quadratic sum	*1.8*

- Final result:

$$\Gamma_{ee} \times \Gamma_{\mu\mu}/\Gamma = 0.3318 \pm 0.0052\ (\text{stat.}) \pm 0.0063\ (\text{syst.})\ \text{keV}$$

Summary of $\Gamma_{ee} \times \Gamma_{\ell\ell}/\Gamma$ results

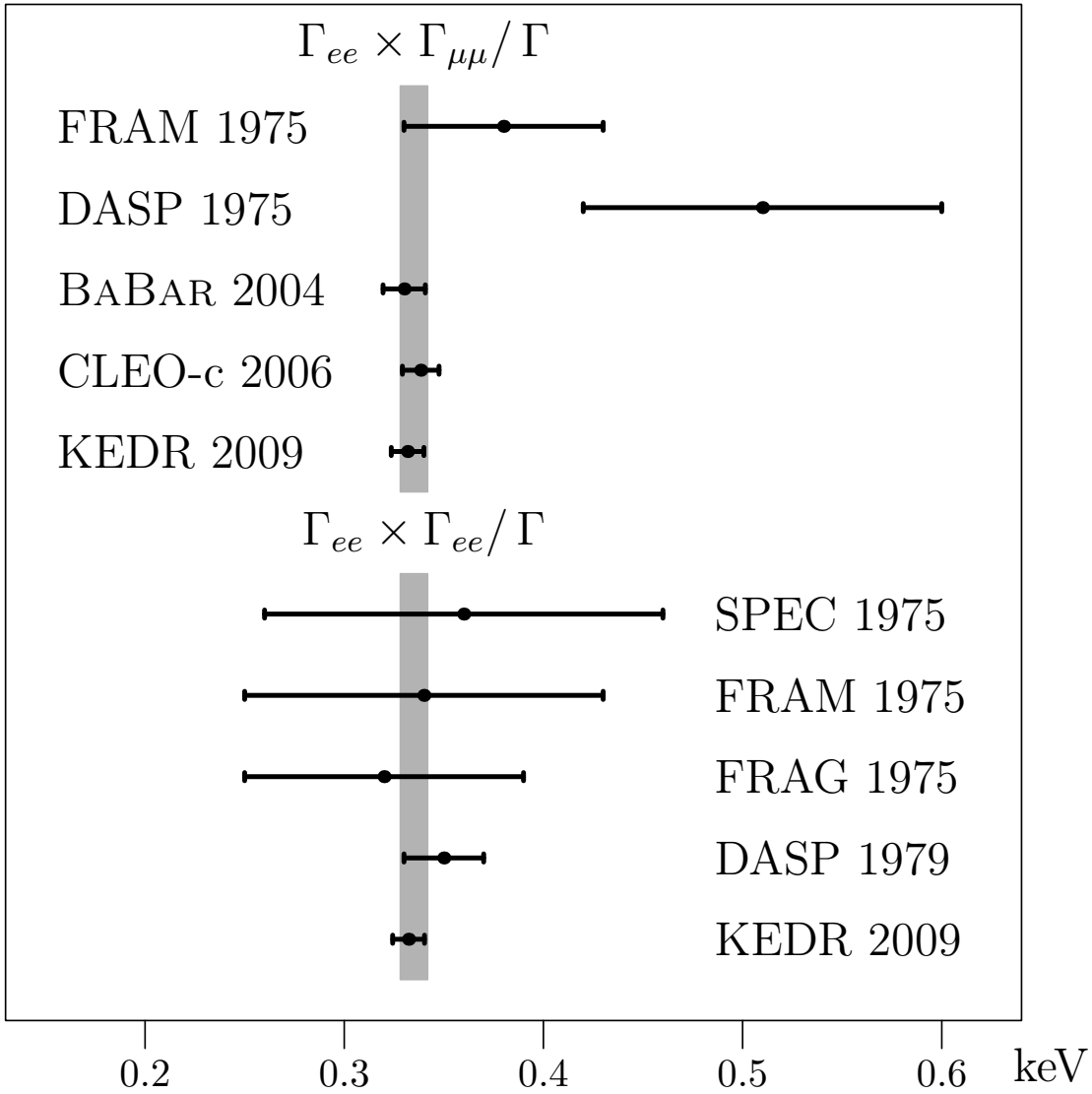

Gray strip for $\Gamma_{ee} \times \Gamma_{\mu\mu}/\Gamma$ world average

Conclusion

- Following products were measured at the VEPP-4 collider with the KEDR detector:

$$\Gamma_{ee} \times \Gamma_{ee}/\Gamma = 0.3323 \pm 0.0064 \ \text{(stat.)} \pm 0.0048 \ \text{(syst.)} \ \text{keV}$$

$$\Gamma_{ee} \times \Gamma_{\mu\mu}/\Gamma = 0.3318 \pm 0.0052 \ \text{(stat.)} \pm 0.0063 \ \text{(syst.)} \ \text{keV}$$

- Assuming e/μ–universality the result is

$$\Gamma_{ee} \times \Gamma_{\ell\ell}/\Gamma = 0.3320 \pm 0.0041 \ \text{(stat.)} \pm 0.0050 \ \text{(syst.)} \ \text{keV}$$

- For the world average value $\Gamma_{\ell\ell}/\Gamma = 5.935 \pm 0.042$ this corresponds to

$$\Gamma_{\ell\ell} = 5.59 \pm 0.12 \ \text{keV}$$

$$\Gamma = 94.2 \pm 2.3 \ \text{keV}$$

- The results are in good agreement with the world average values a bit better accuracy