Common Software for Controlling and Monitoring the Upgraded CMS Level-1 Trigger

Giuseppe Codispoti, Simone Bologna, Glenn Dirkx, Christos Lazaridis, Alessandro Thea, Tom Williams

TIPP2017: I*nternational Conference on Technology and Instrumentation in Particle Physics 2017*
22-26 May 2017, Institute of High Energy Physics, CAS, Beijing (China)

The CMS Level-1 Trigger Upgrade

- The CMS Level-1 Trigger ***selects 100 kHz*** of interesting events from ***40MHz pp collisions***
  - decision within 3.8 μs using coarse resolution objects ("*trigger primitives*")
  - full-resolution data held in pipeline memories
- ***LHC restarted*** in 2015 after Long Shutdown 1 with ***higher energy & luminosity***
  - **trigger hardware replaced** in a very short time in order to maintain/improve performance

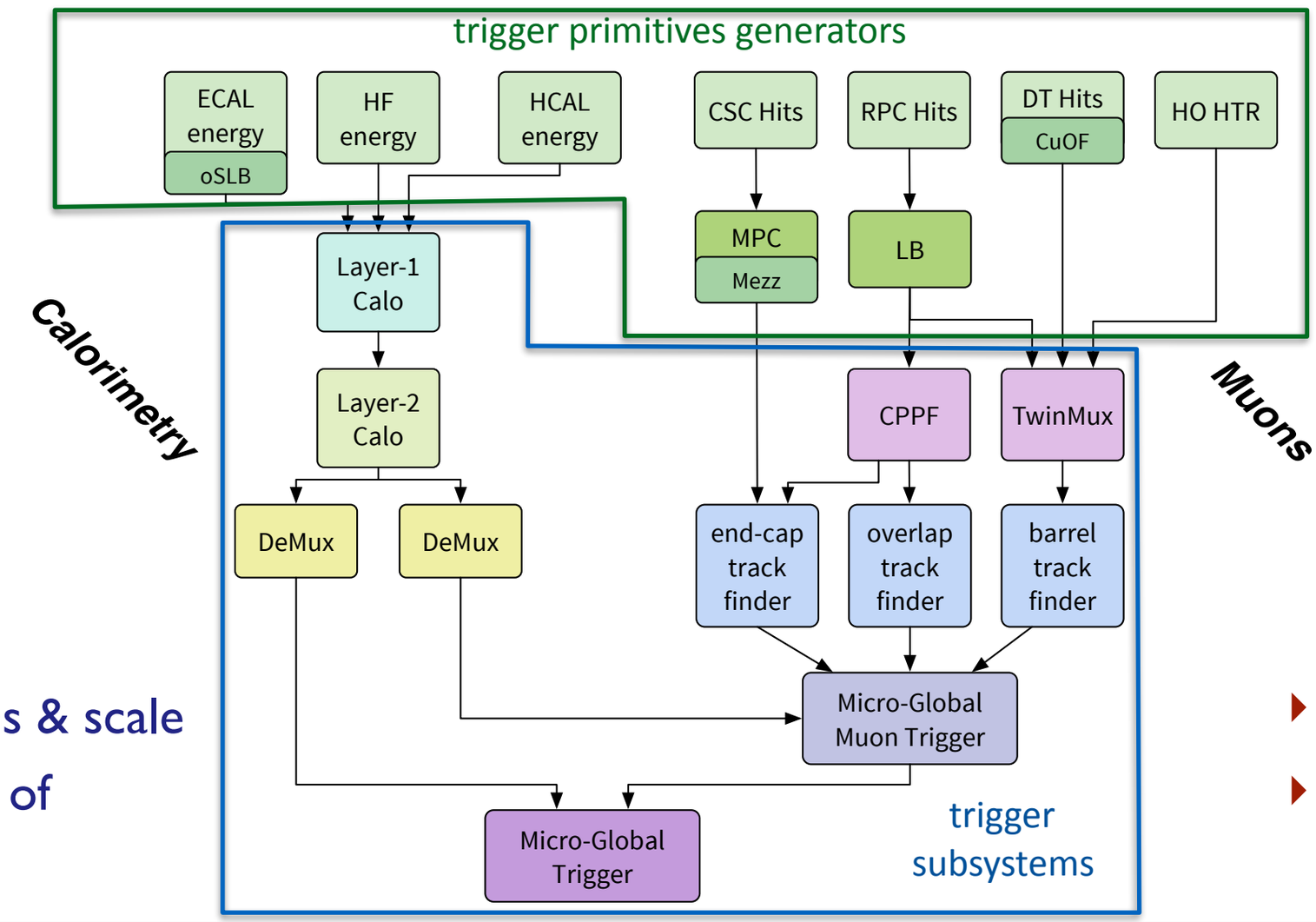

- 9 subsystems
- different algorithms & scale
- 6 different designs of processor boards

- O(100) boards
- O(3000) links

The Online Software Challenge

- Hardware ***completely replaced***
  - substituting a long stably running system
- Approximately 90% of software to be ***rewritten***
  - control, monitoring, bookkeeping of the configuration setup
  - risk of code duplication due to the large number of components
- Available time to have a fully working system limited to ***few months***
- Strategy adopted: ***maximise common software***
  - exploiting partial standardisation of the hardware
  - imposing a ***common hardware abstraction layer***

Upgraded Level-1 Trigger Hardware

- Hardware commonalities
  - based on **μ*TCA*** (modern telecom standards)
  - System wide use of latest ***FPGAs*** - Xilinx Virtex® 7
  - high speed serial ***optical links***
  - standard Timing, Controls and DAQ interface (***AMC13***)
- ***Common abstraction layer for***
  - ***processors***
  - ***subsystems***

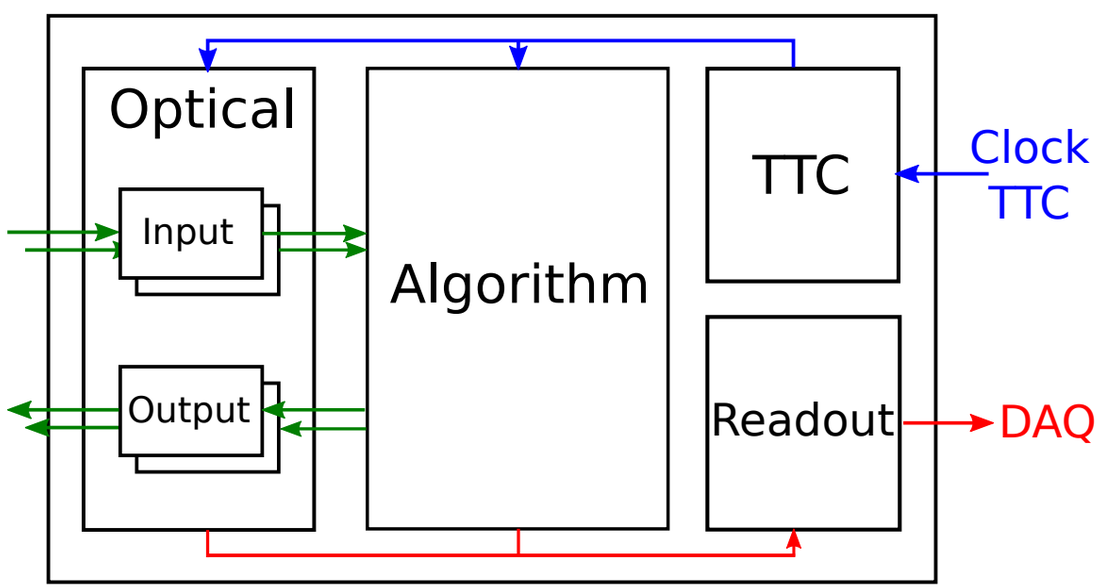

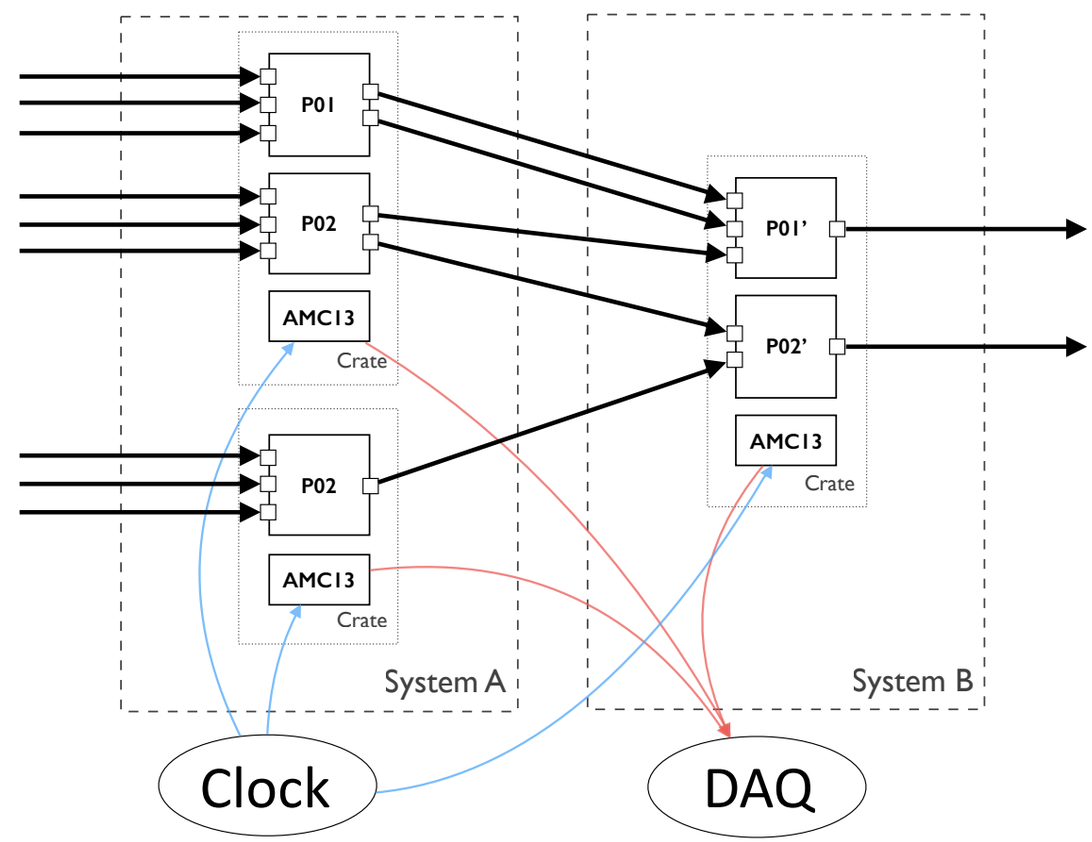

SWATCH: a Common Software Framework

- **SWATCH**:

  Soft**W**are for **A**utomating the con**T**rol of **C**ommon **H**ardware
  - design based on common processor/system models
  - abstract C++ interfaces for controlling & monitoring hardware
  - specialisation through inheritance
- ***Subsystem-agnostic*** description of hardware
  - the subsystem provides specialised implementations of processors, optical I/O ports, interconnections and their mapping in the crate(s)
  - the framework builds the subsystem control software using the subsystem-specific classes
- ***Generic API*** implement multi-threading and thread safety
  - ready-to-use solutions for tricky tasks such as monitoring threads

SWATCH: Control System

- Minimise code duplication through standardised access to the hardware across the different subsystems
- ***Commands***: the building blocks of the board control system
  - used for testing as single action or chained in sequences
  - compose the transitions of the operational FSM
  - specific behaviours implemented through dedicated configuration parameters
- The ***Gatekeeper*** "*builds*" the system using XML-formatted description

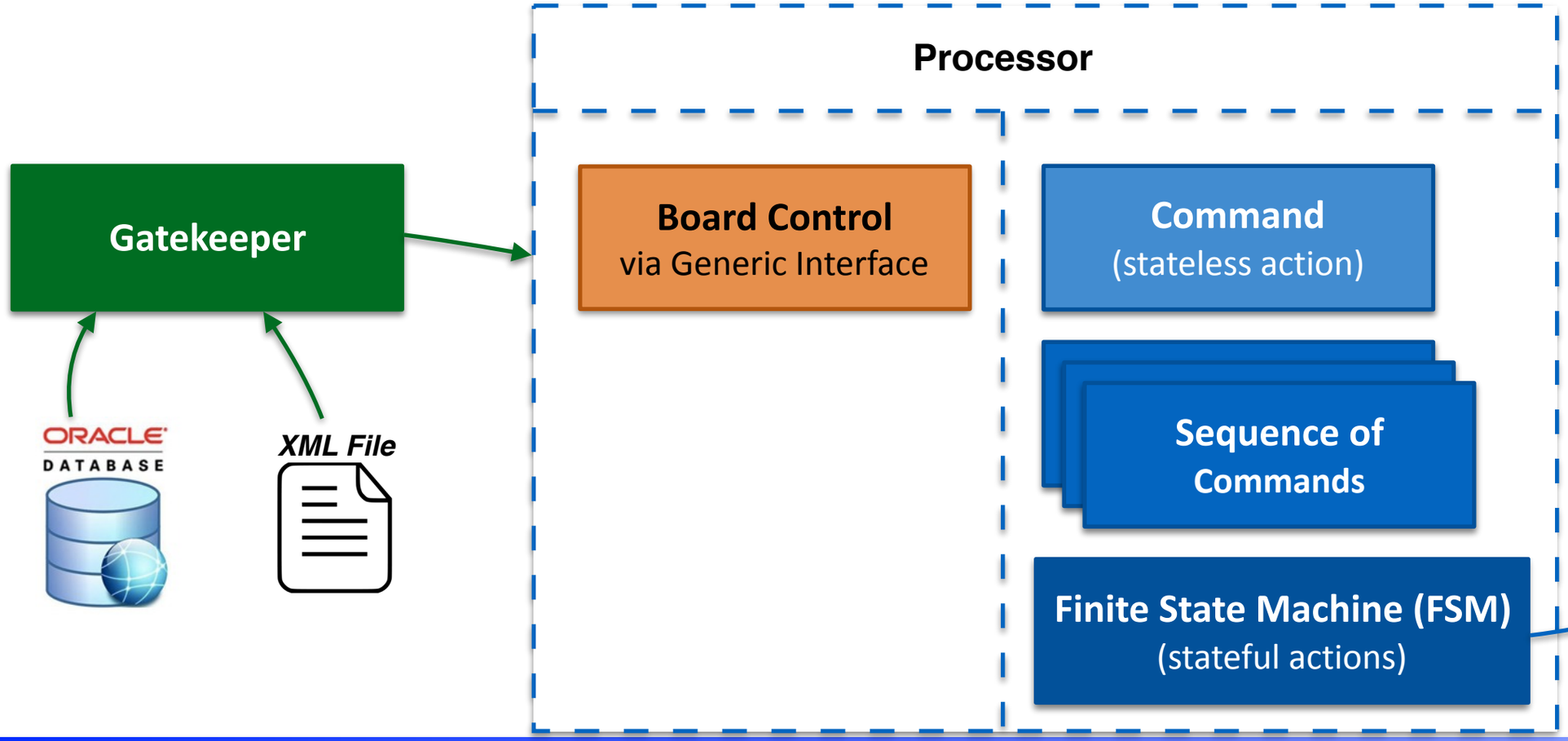

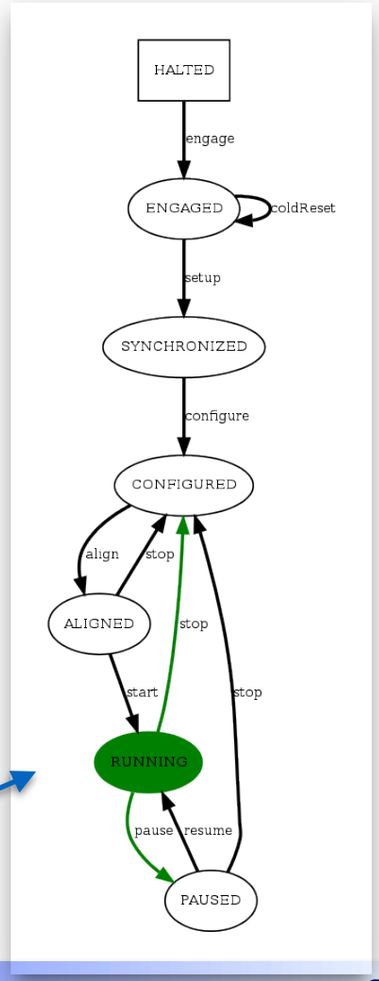

SWATCH: Monitoring

- ***The monitoring challenge***: standardised definition of monitoring data items across all the subsystems
- ***Metrics:*** building blocks of the monitoring system
  - standardise monitoring data registration, publication and storage
  - logic for error/warning levels
- ***Thread safety*** between control and monitoring ***ensured*** at framework level

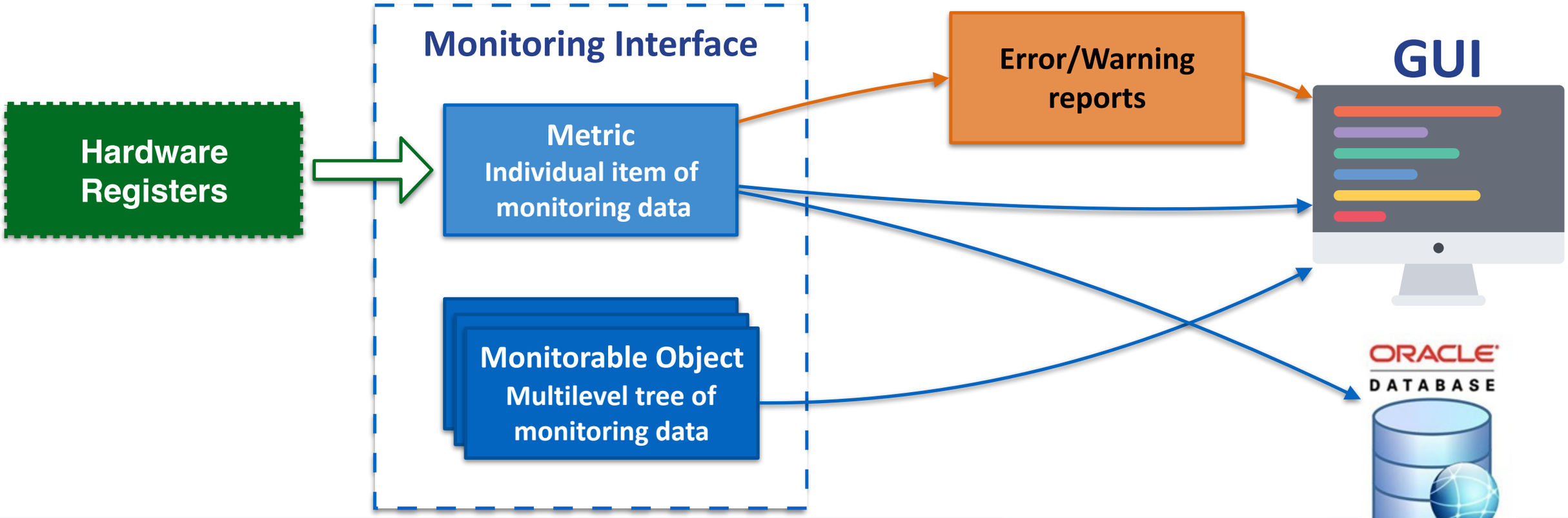

SWATCH Generic Web GUIs

- Access to both ***common & subsystem-specific*** control/monitoring primitives
  - significantly reduced required development manpower
  - uniform interface for operators
- Graphic interface based on "***Google Polymer***" - HTML5, SCSS, JavaScript/ES6

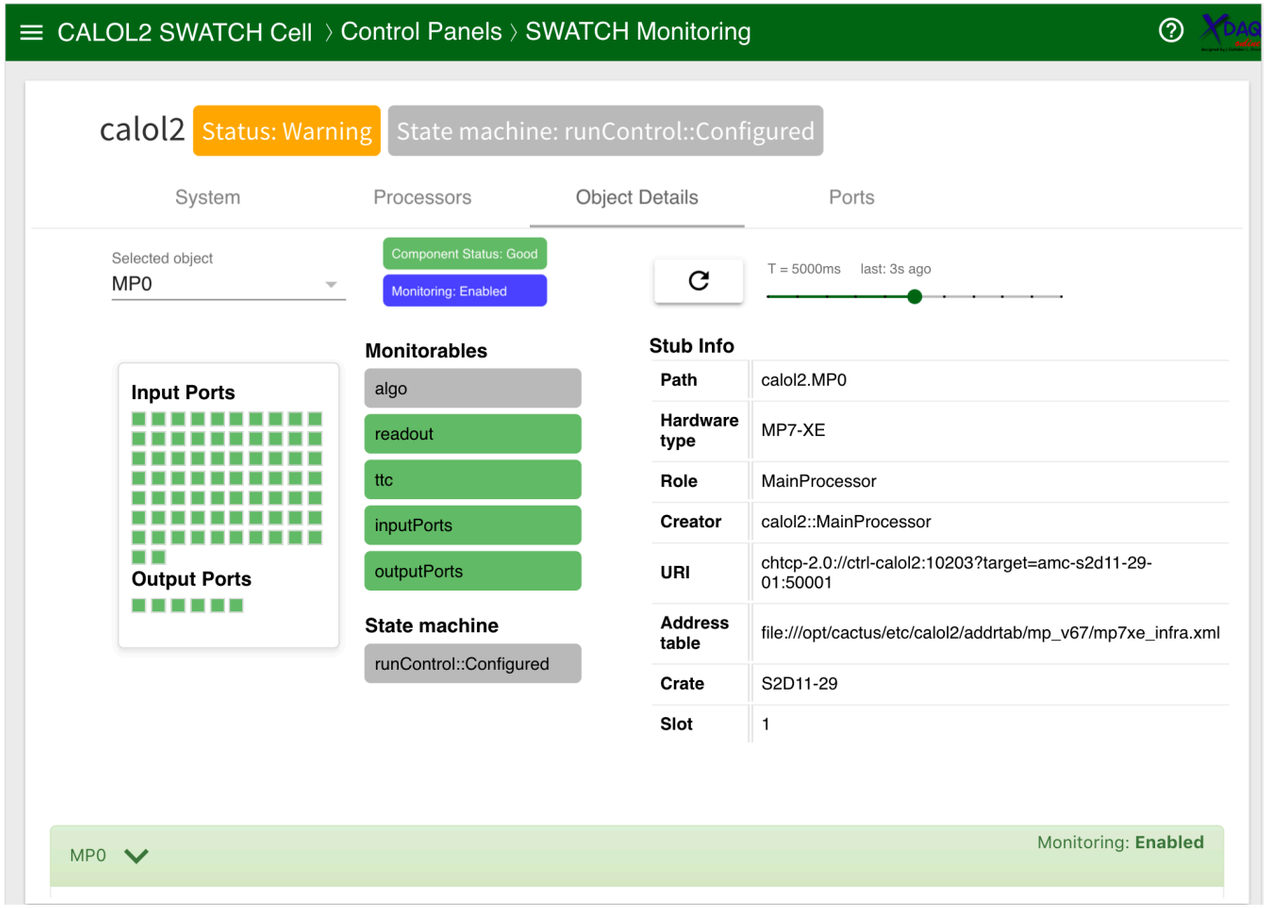

SWATCH Monitoring Panel

CALOL2 SWATCH Cell 〉Control Panels 〉SWATCH Monitoring

calol2 | Status: Warning | State machine: runControl::Configured

System | Processors | Object Details | Ports

Selected object
MP0

Component Status: Good
Monitoring: Enabled

T = 5000ms last: 3s ago

Input Ports

Output Ports

Monitorables

- algo
- readout
- ttc
- inputPorts
- outputPorts

State machine

runControl::Configured

Stub Info

Path	calol2.MP0
Hardware type	MP7-XE
Role	MainProcessor
Creator	calol2::MainProcessor
URI	chtcp-2.0://ctrl-calol2:10203?target=amc-s2d11-29-01:50001
Address table	file:///opt/cactus/etc/calol2/addrtab/mp_v67/mp7xe_infra.xml
Crate	S2D11-29
Slot	1

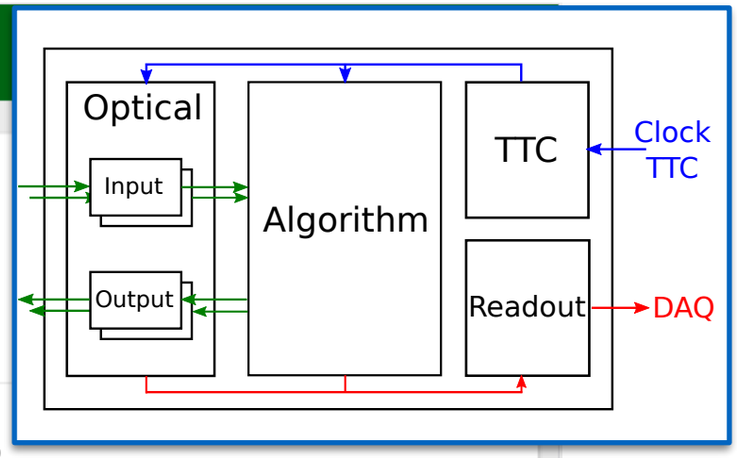

Processor View

MP0 Monitoring: **Enabled**

SWATCH Monitoring Panel

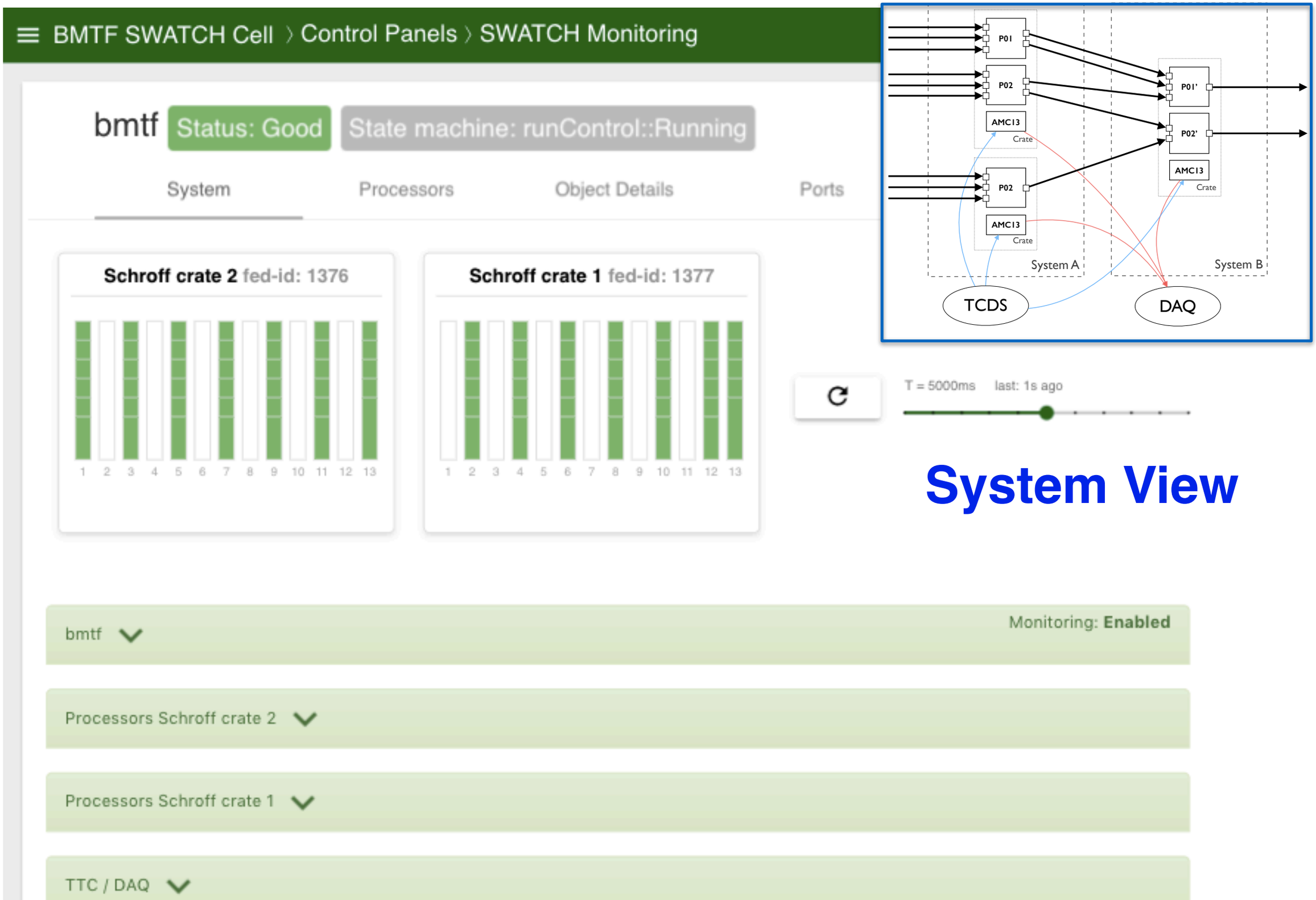

System View

SWATCH Monitoring Panel

uGT SWATCH Cell 〉 Control Panels 〉 SWATCH Metrics

Metric ID regexp:
.*RATE_130

SETTINGS

uGT.MP7_slot1.algo.BPRATE_130
uGT.MP7_slot1.algo.PDRATE_130
uGT.MP7_slot1.algo.PREVIEW_RATE_130
uGT.MP7_slot1.algo.RATE_130

ALL | NONE

ADD METRICS | REMOVE METRIC

HIDE

N° of saved points
1000

T = 5000ms last: 10s ago

Chart | Values

SAVE PLOT

CLEAR

Autoscale Y

Min Y
0

Max Y

Logarithmic scale

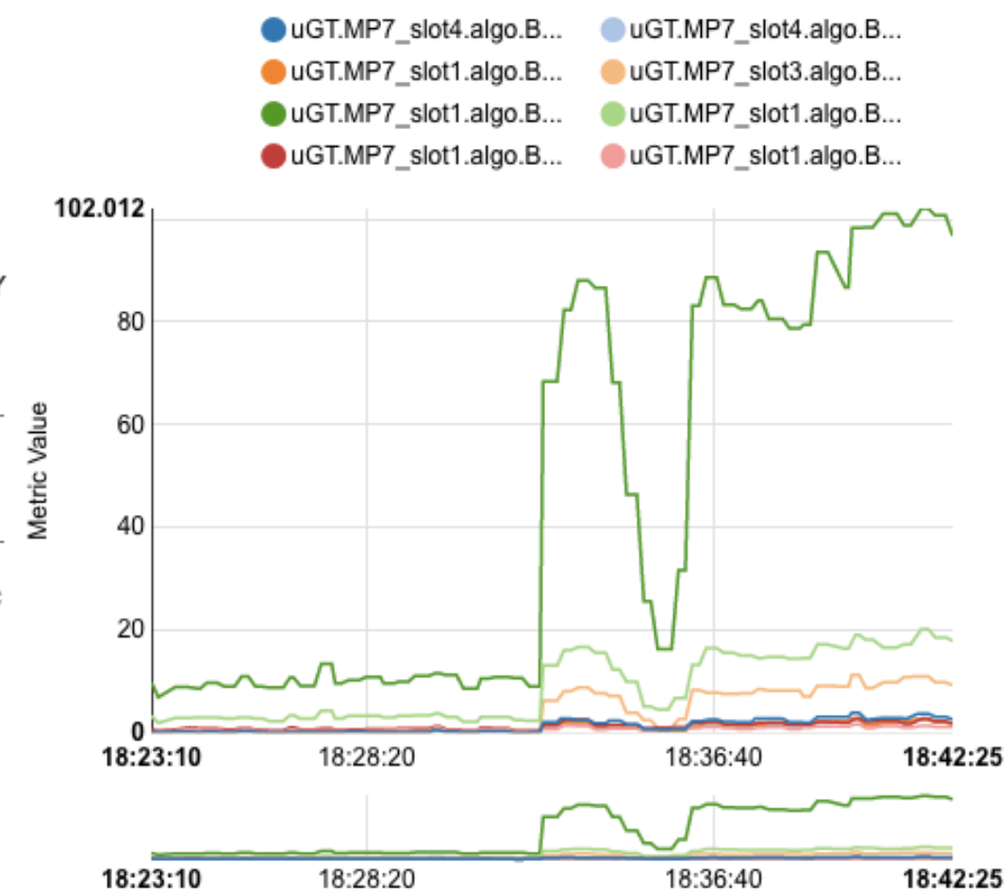

Metrics Aggregation

SWATCH Control Panel

CALOL2 SWATCH Cell 〉 Control Panels 〉 SWATCH Commands

Select object type:
- calol2::Demux
- **calol2::MainProcessor**
- swatch::amc13::AMC13Manager

Select command:
- cfgHdrFormatter
- cfgMPAlgo
- cfgRxBuffers
- **cfgRxMGTs**
- cfgTxBuffers

Select device:
- MP0
- MP1
- MP2
- MP3
- **MP4**

SELECT ALL | SELECT NONE

Parameters

ids (string)

masks (string)
apply

orbitTag
polarity

Load from GateKeeper:

Namespace

LOAD FROM GATEKEEPER

LOAD DEFAULT VALUES

RUN COMMAND

Last updated: 13:38:47

Object	Status	Running time	Progress	Message	Result Details
MP4	Done	0.436 s	100%	Configure Rx MGTs completed: Rx00, Rx01, Rx02, Rx03, Rx04, Rx05, Rx06, Rx07, Rx08, Rx09, Rx10, Rx11, Rx12, Rx13, Rx14, Rx15, Rx16, Rx17, Rx18, Rx19, Rx20, Rx21, Rx22, Rx23, Rx24, Rx25, Rx26, Rx27, Rx28, Rx29, Rx30, Rx31, Rx32, Rx33, Rx34, Rx35, Rx36, Rx37, Rx38, Rx39, Rx40, Rx41, Rx42, Rx43, Rx44, Rx45, Rx46, Rx47, Rx48, Rx49, Rx50,	

Manual Parameters Input

Command

Board

Select Parameters Source (or alternatively use manual input)

Results

The Configuration Database

- CMS need to unambiguously identify and record the tests and data-taking conditions
  - Oracle Configuration Database
- Per subsystems L1-Trigger configuration
  - split in logic block
  - connected with tree-like structure of database ***keys*** (aka foreign keys)
  - ***XML*** format, simplified transition from commissioning to data-taking
- Developed a dedicated Database ***Configuration Editor***
  - essential tool to deal with the ***database complexity***
  - easily ***tracks changes***
    - ➡ appropriate ***naming*** and ***versioning*** system
    - ➡ automatic ***metadata*** insertion (date, user)
  - ***comparison*** tool among different configurations
  - built-in ***XML editor***

Database Configuration Editor

- Technology choice driven by:
  - flexibility
  - maintainability

JavaScript
- same language for API and interface
- native JSON communication
- modern and supported standards

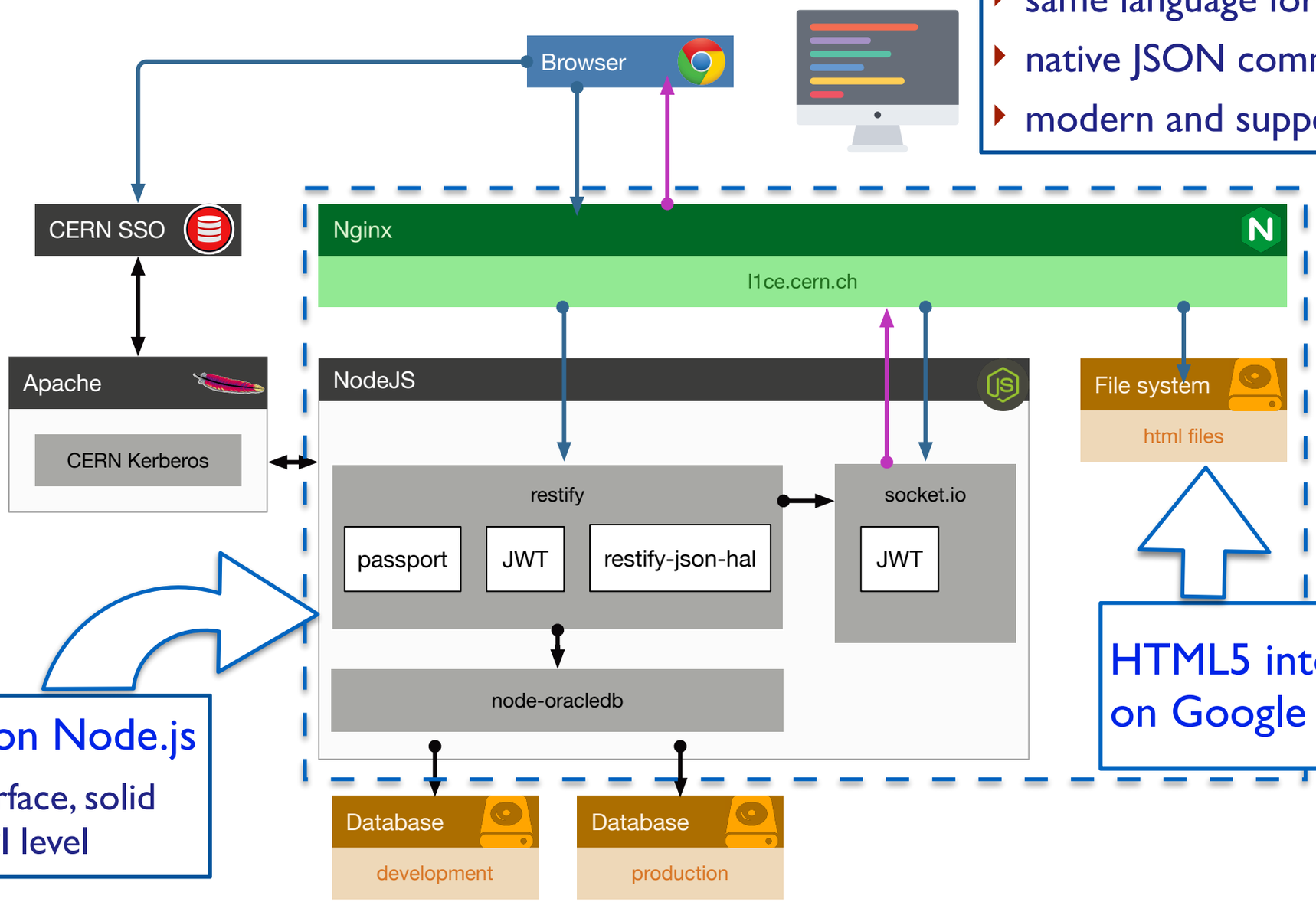

REST API based on Node.js
- fully stateless interface, solid user session at API level

HTML5 interface based on Google Polymer

Database Configuration Editor

valid/invalid keys selector

upload/download files expand view

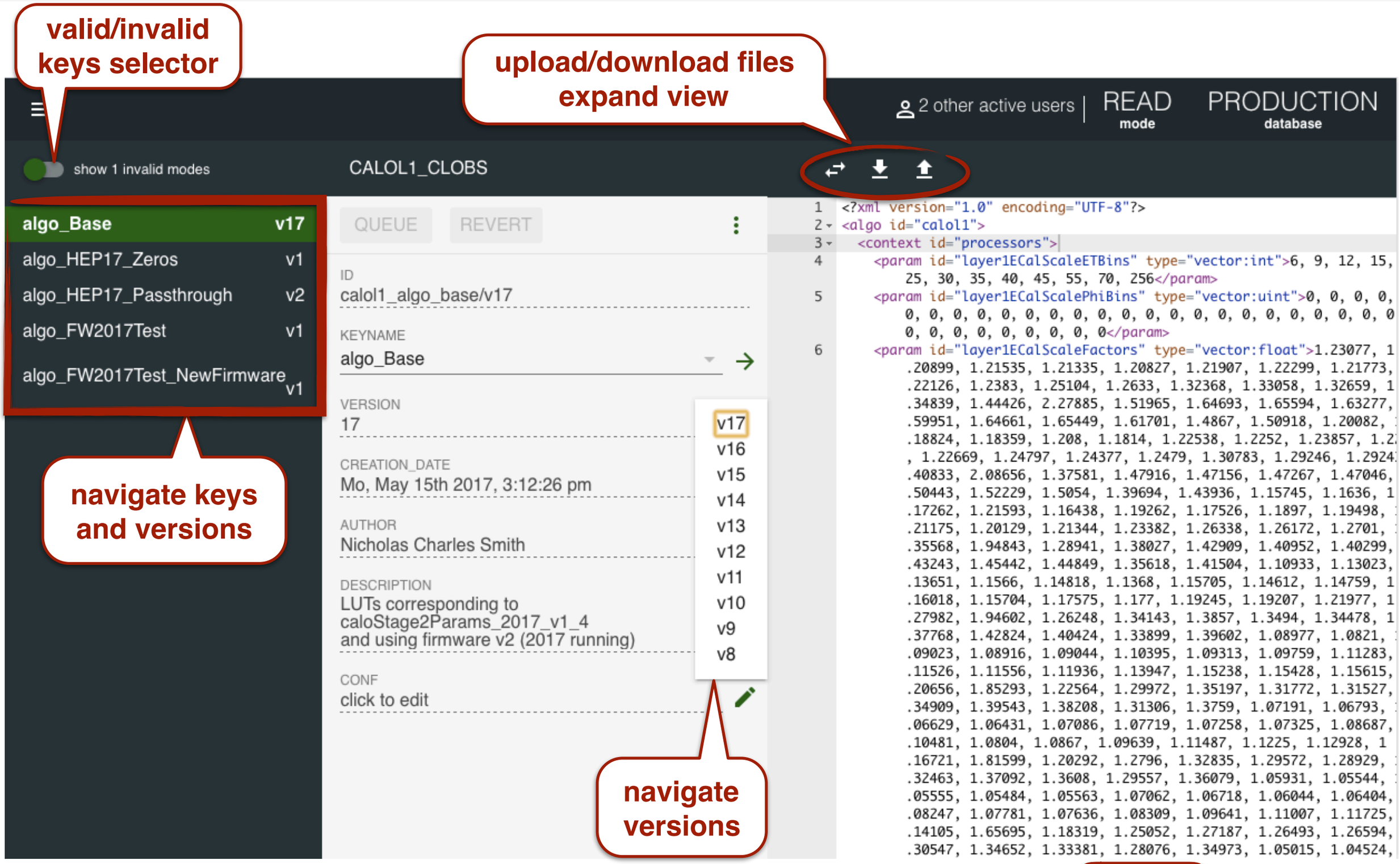

algo_Base **v17**
algo_HEP17_Zeros v1
algo_HEP17_Passthrough v2
algo_FW2017Test v1
algo_FW2017Test_NewFirmware v1

ID
calol1_algo_base/v17

KEYNAME
algo_Base

VERSION
17

CREATION_DATE
Mo, May 15th 2017, 3:12:26 pm

AUTHOR
Nicholas Charles Smith

DESCRIPTION
LUTs corresponding to caloStage2Params_2017_v1_4 and using firmware v2 (2017 running)

CONF
click to edit

```
<?xml version="1.0" encoding="UTF-8"?>
<algo id="calol1">
  <context id="processors">
    <param id="layer1ECalScaleETBins" type="vector:int">6, 9, 12, 15,
        25, 30, 35, 40, 45, 55, 70, 256</param>
    <param id="layer1ECalScalePhiBins" type="vector:uint">0, 0, 0, 0,
        0, 0, 0, 0, 0, 0, 0, 0, 0, 0, 0, 0, 0, 0, 0, 0, 0, 0, 0, 0, 0
        0, 0, 0, 0, 0, 0, 0, 0, 0</param>
    <param id="layer1ECalScaleFactors" type="vector:float">1.23077, 1
        .20899, 1.21535, 1.21335, 1.20827, 1.21907, 1.22299, 1.21773,
        .22126, 1.2383, 1.25104, 1.2633, 1.32368, 1.33058, 1.32659, 1
        .34839, 1.44426, 2.27885, 1.51965, 1.64693, 1.65594, 1.63277,
        .59951, 1.64661, 1.65449, 1.61701, 1.4867, 1.50918, 1.20082,
        .18824, 1.18359, 1.208, 1.1814, 1.22538, 1.2252, 1.23857, 1.2
        , 1.22669, 1.24797, 1.24377, 1.2479, 1.30783, 1.29246, 1.2924
        .40833, 2.08656, 1.37581, 1.47916, 1.47156, 1.47267, 1.47046,
        .50443, 1.52229, 1.5054, 1.39694, 1.43936, 1.15745, 1.1636, 1
        .17262, 1.21593, 1.16438, 1.19262, 1.17526, 1.1897, 1.19498,
        .21175, 1.20129, 1.21344, 1.23382, 1.26338, 1.26172, 1.2701,
        .35568, 1.94843, 1.28941, 1.38027, 1.42909, 1.40952, 1.40299,
        .43243, 1.45442, 1.44849, 1.35618, 1.41504, 1.10933, 1.13023,
        .13651, 1.1566, 1.14818, 1.1368, 1.15705, 1.14612, 1.14759, 1
        .16018, 1.15704, 1.17575, 1.177, 1.19245, 1.19207, 1.21977, 1
        .27982, 1.94602, 1.26248, 1.34143, 1.3857, 1.3494, 1.34478, 1
        .37768, 1.42824, 1.40424, 1.33899, 1.39602, 1.08977, 1.0821,
        .09023, 1.08916, 1.09044, 1.10395, 1.09313, 1.09759, 1.11283,
        .11526, 1.11556, 1.11936, 1.13947, 1.15238, 1.15428, 1.15615,
        .20656, 1.85293, 1.22564, 1.29972, 1.35197, 1.31772, 1.31527,
        .34909, 1.39543, 1.38208, 1.31306, 1.3759, 1.07191, 1.06793,
        .06629, 1.06431, 1.07086, 1.07719, 1.07258, 1.07325, 1.08687,
        .10481, 1.0804, 1.0867, 1.09639, 1.11487, 1.1225, 1.12928, 1
        .16721, 1.81599, 1.20292, 1.2796, 1.32835, 1.29572, 1.28929,
        .32463, 1.37092, 1.3608, 1.29557, 1.36079, 1.05931, 1.05544,
        .05555, 1.05484, 1.05563, 1.07062, 1.06718, 1.06044, 1.06404,
        .08247, 1.07781, 1.07636, 1.08309, 1.09641, 1.11007, 1.11725,
        .14105, 1.65695, 1.18319, 1.25052, 1.27187, 1.26493, 1.26594,
        .30547, 1.34652, 1.33381, 1.28076, 1.34973, 1.05015, 1.04524,
```

navigate keys and versions

navigate versions

xml editor

The Trigger Level-1 Page

- ***Central aggregator*** of trigger information
  - concise *visual overview* of the status of the system
  - collector of *warnings and alarms* from trigger subsystems
  - links to applications and *documentation*
  - based on the same architecture as the Database Editor

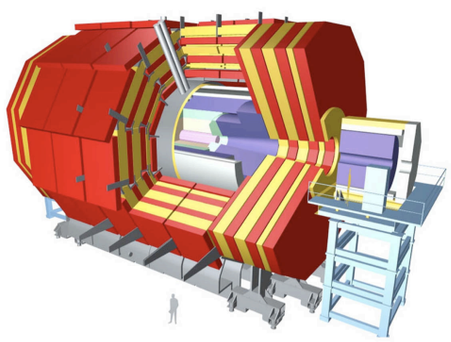

Running conditions

L1-Trigger Configuration State and Errors

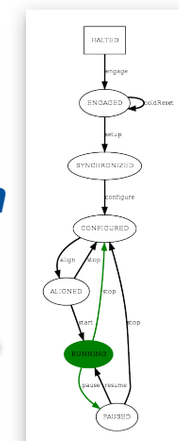

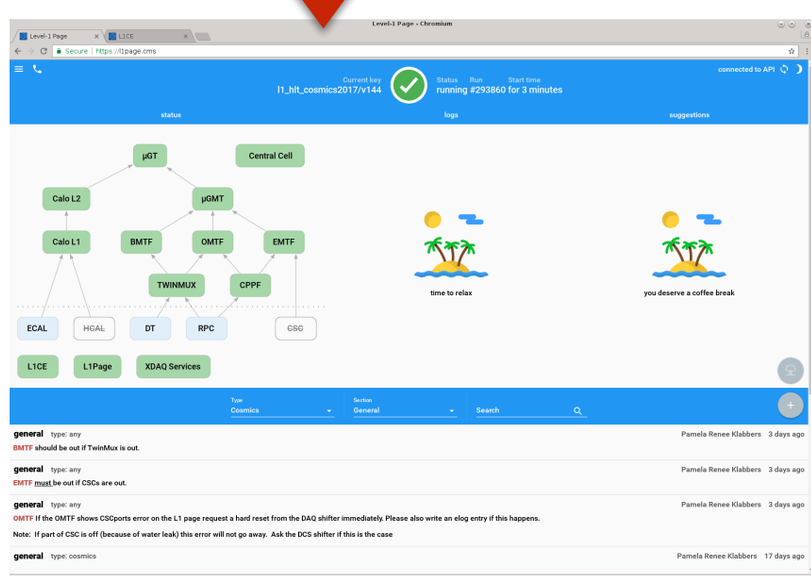

L1-Trigger Monitoring Warnings and Errors

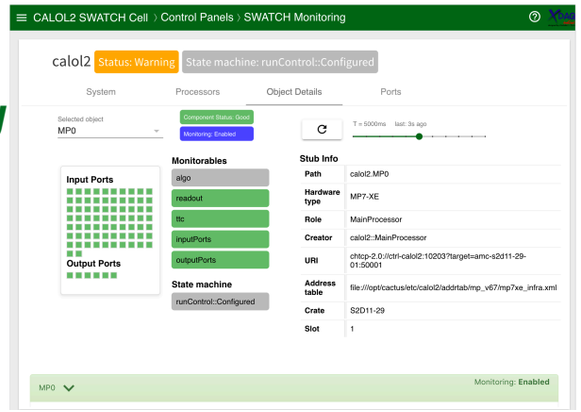

The Trigger Level-1 Page

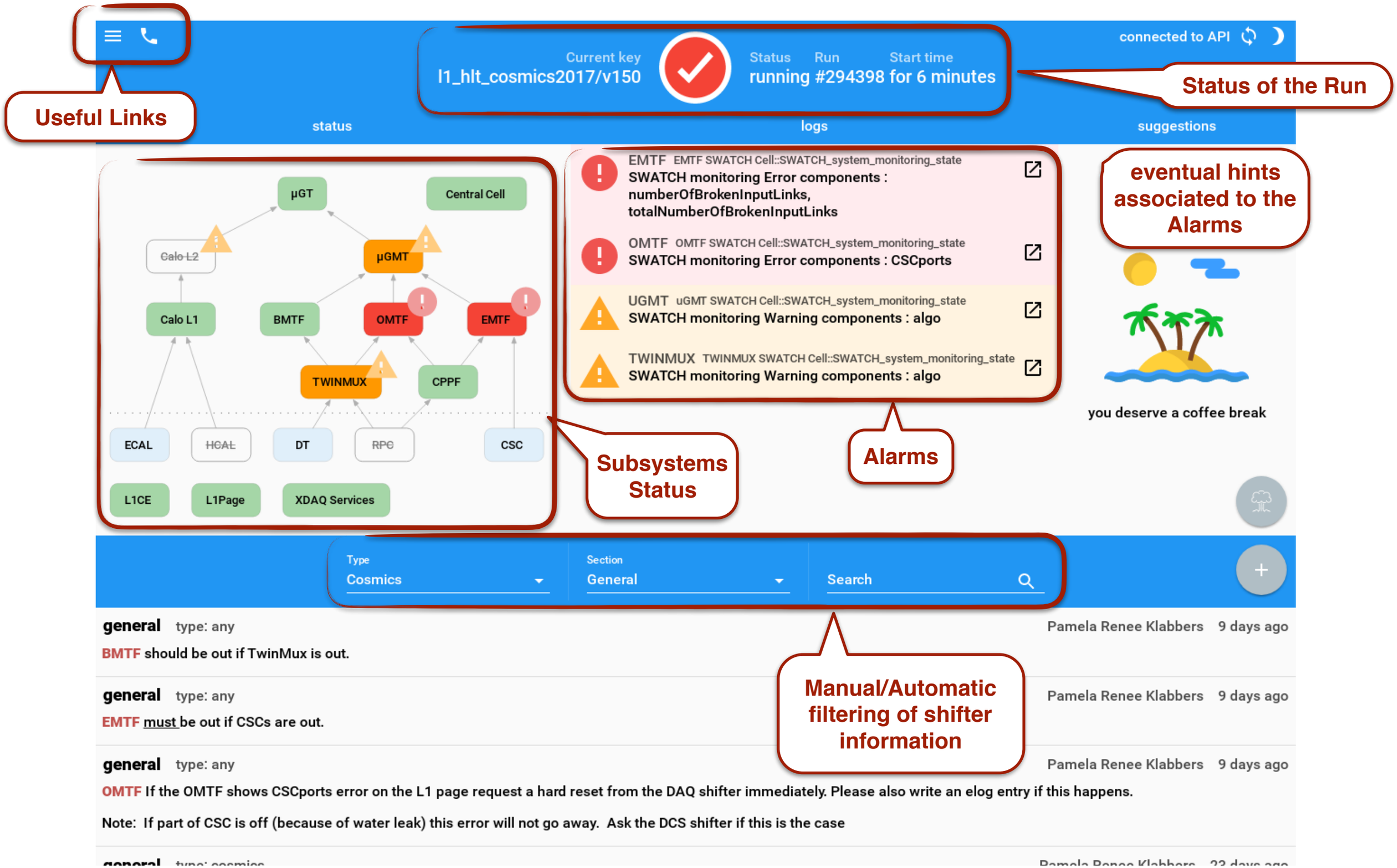

The Commissioning challenge

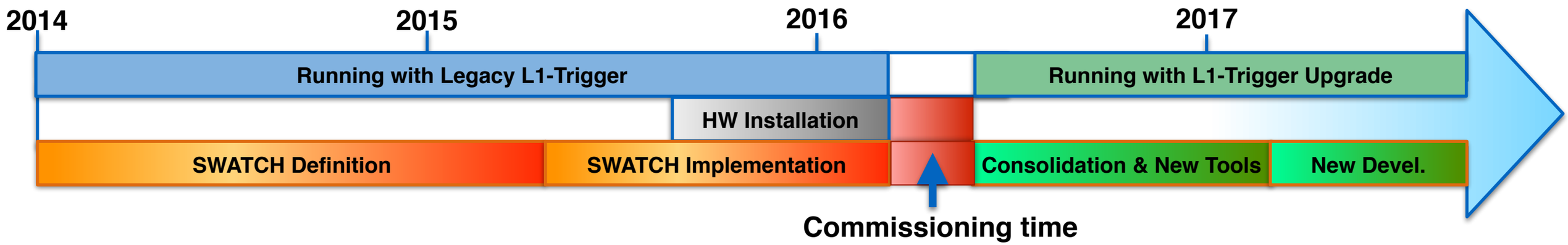

- Upgraded Level-1 Trigger ***installed*** during 2015/2016 winter
- ***Used*** as CMS trigger on February 25th 2016
  - SWATCH configuration integrated in the CMS Run Control
- ***Database integrated*** on March 21st, both configuration and critical monitoring
  - ***in time*** for beam splashes on March 25th
- Collisions time used for development of the new tools, deployed on 2017
  - Configuration Editor, L1-page

Summary and Outlook

- The **CMS Level-1 Trigger** has been ***successfully upgraded*** in 2016
- Level-1 Trigger **Online Software** almost *completely rewritten*
  - *h*ardware control, monitoring, database, configuration editor, L1-page
- Good design and planning of the Online Software ***largely contributed*** to the *commissioning success* and the *data taking reliability*
- The current software infrastructure is ready to serve for the next years
  - yet *flexible* enough to allow further developments and improvements
- Development continues in order to improve the usability of the system from the point of view of the operator and reduce the possibility of errors
  - simplify and improve interfaces

BACKUPS

L1 Trigger Online Software Layers

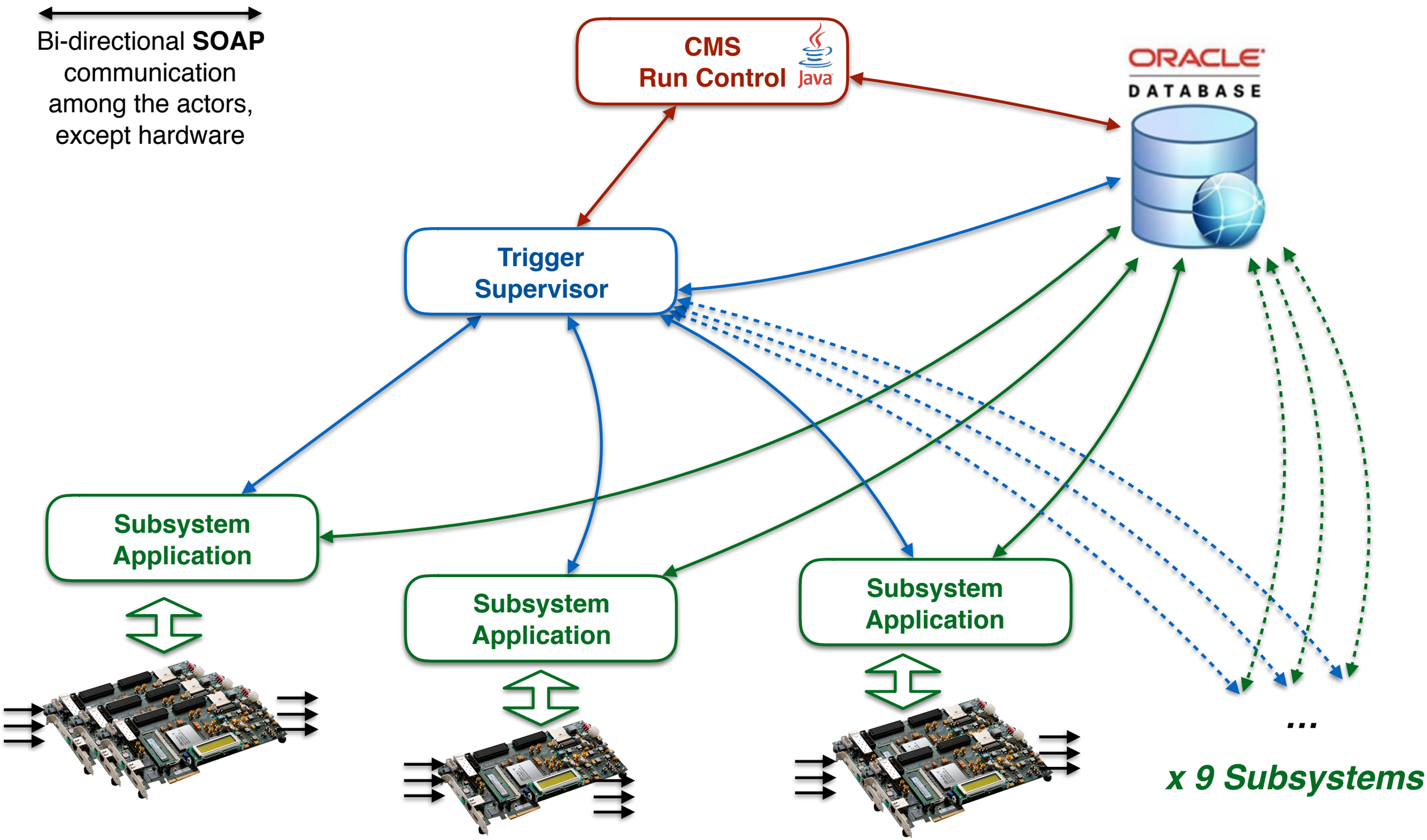

The SWATCH Cell

- A SWATCH Cell is implemented for each subsystem
  - SWATCH provides the hardware access for the specific processor(s)
  - Trigger Supervisor libraries provide GUI and network communication
    - based on XDAQ, a platform for distributed data acquisition systems
    - reusing or readapting general purpose code from legacy system
- SWATCH Cell provides generic implementations of services:
  - network-controllable FSM
  - monitoring state publication
  - DB communication
    - Common DB schema
  - control/monitoring GUIs
    - based on Google Polymer
      - HTML5, CSS3, JavaScript/ES6

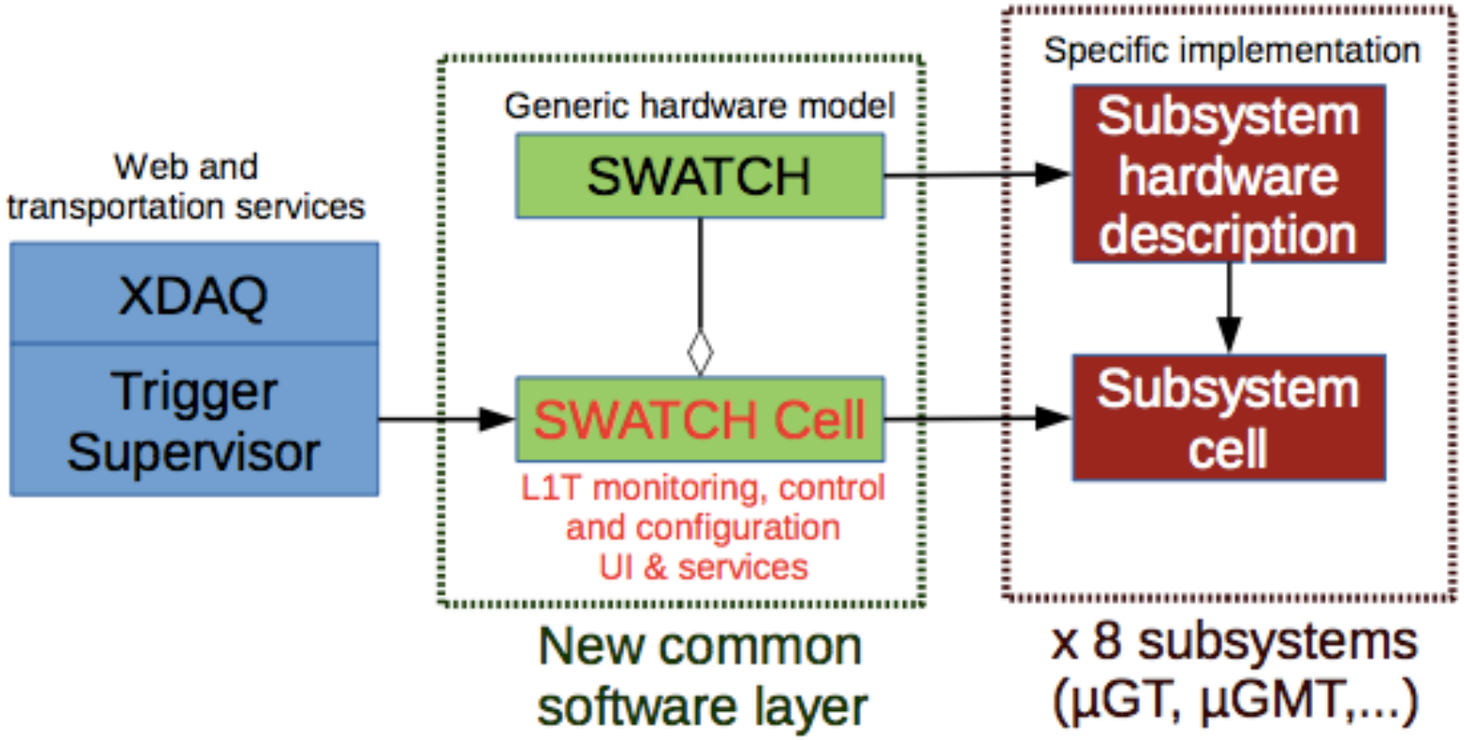

Configuration Database

- **Hardware** description
  - e.g. crate composition, number of boards, number of links
- **Infrastructure**, aka *hardware configuration*
  - pure online parameters
- **Algorithm** configuration
  - needed also offline for the analysis
- **Run Settings**
  - "rapidly" changing data taking parameters
  - e.g.: hardware masking, trigger prescale, etc.

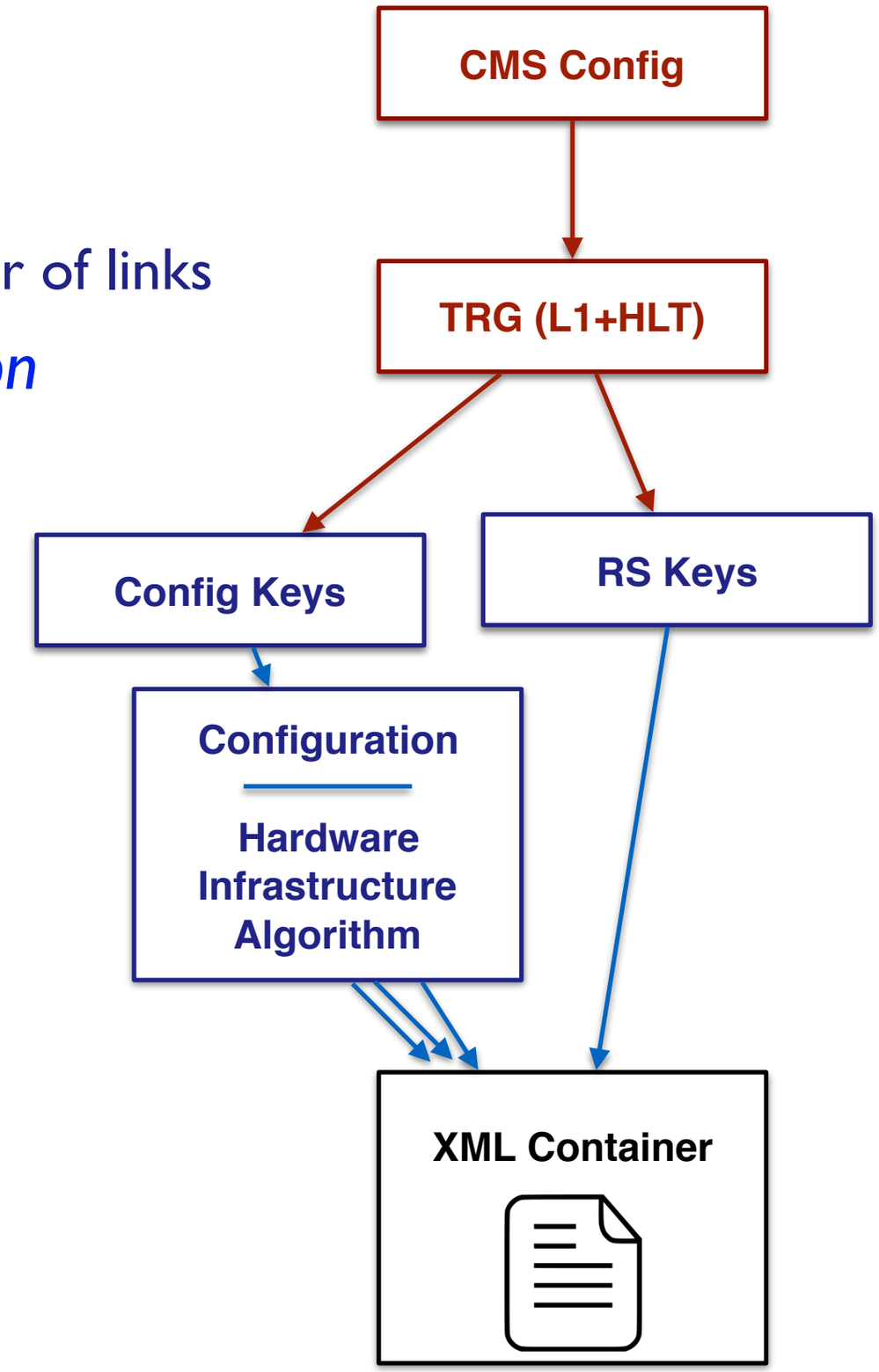

Monitoring Database

- Two categories of monitoring information
  - ***critical*** for data taking and offline data certification
    - e.g. rates and prescales
    - direct connection with DB, high reliability, any problem stops data taking
  - hardware status for ***post-mortem*** analysis
    - data is pushed to a XDAQ application that takes care of saving to the Oracle DB
    - failures do not affect data taking

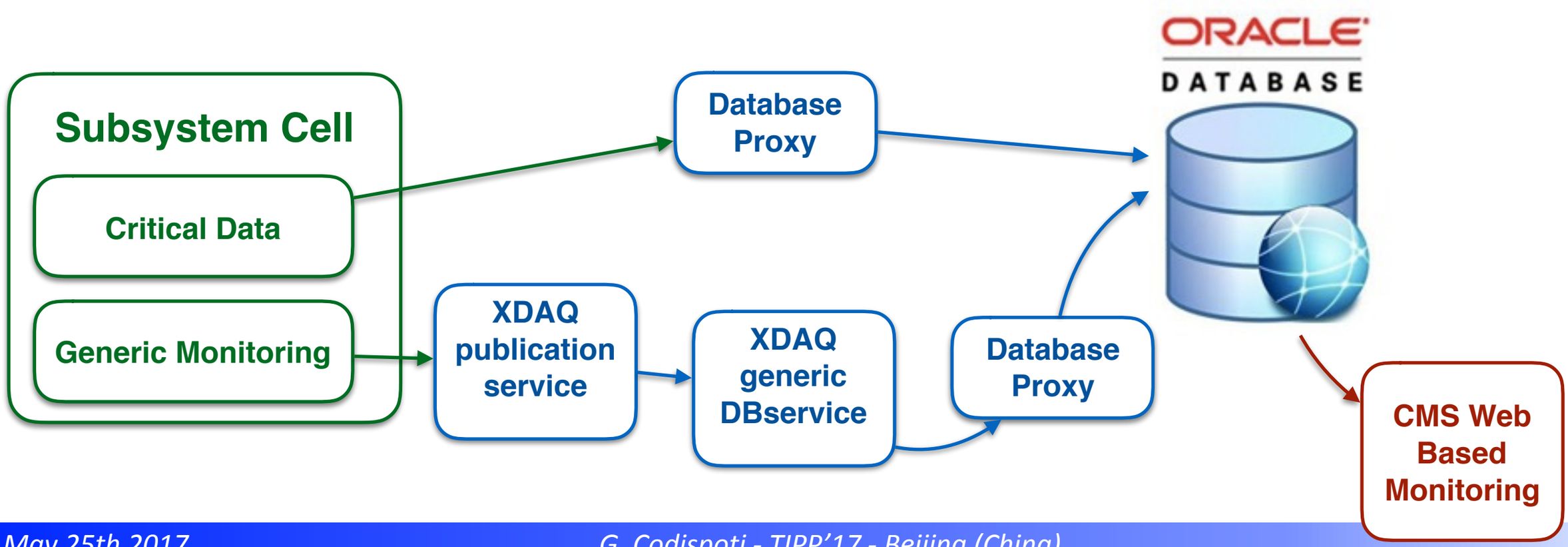

Database Configuration Editor

L1 Configuration Editor | 6 other active users | READ mode | PRODUCTION database

Giuseppe Codispoti | show 13 invalid modes | L1_TRG_CONF_KEYS | UGMT_KEYS

Editor

Subsystem: L1 Trigger

Section: Configuration

Dashboard

cosmics2017	v78
highratetest2017	v12
beamsplash2017	v10
circulating2017	v10
collisions2017	v5
romanpotalignment2017	v1

QUEUE REVERT

ID: l1_trg_collisions2017/v5
L1_TRG_MODE: collisions2017
VERSION: 5
CREATION_DATE: Tu, May 16th 2017, 3:23:34 pm
AUTHOR: Dinyar Rabady
DESCRIPTION: CPPF configuration moved from textfiles.
UGT_KEY: ugt_base2017/v23
UGMT_KEY: ugmt_base/v34
CALOL1_KEY: 2

QUEUE REVERT

ID: ugmt_base/v34
KEYNAME: base
VERSION: 34
CREATION_DATE: Mo, Apr 10th 2017, 8:48:15 am
AUTHOR: Thomas Reis
DESCRIPTION: set ugmt_v4.1.0.bin sd file
HW: ugmt_hw_base/v7
INFRA: ugmt_infra_base/v31
ALGO: ugmt_algo_base/v9

Highlights if there is a new version of a given key

upload/download files expand view

Giuseppe Codispoti | PENDING CHANGES | COMPARE KEYS | ACTIVE USERS

Editor

Dashboard

Subsystem: uGT
Section: Run Settings
Mode 1: rs_collisions2017
Version 1: 1
Mode 2: rs_cosmics2017
Version 2: 2

ID: ugt_rs_algo_prescale_new/v10	ugt_rs_algo_prescale_new/v11
NAMESPACE: rs_algo_prescale	rs_algo_prescale
KEYNAME: rs_algo_prescale_NEW	rs_algo_prescale_NEW
VERSION: 10	11
CREATION_DATE: 10 days ago (May 8th 2017)	8 days ago (May 10th 2017)
AUTHOR: Claudia Wulz	Johannes Wittmann
DESCRIPTION: first version of the menu for circulating2017, enabled ZeroBias for test collisions	updated uGT cosmics run settings to reflect the status of the l1_trg_rs_cosmics2017/v58

CONF CHANGED

```
@@ -1,298 +1,298 @@
- <?xml version="1.0" encoding="UTF-8"?>
- <!--TSG Tool v3.1 - uGT Prescale Generator-->
- <!--Generated on Mon May 08 2017 11:09:57 GMT+0200 (CEST)-->
- <!--from PrescaleCollisions_L1v3-->
- <run-settings id="uGT">
-  <context id="uGtProcessor">
-   <param id="index" type="uint">0</param>
-   <param id="prescales" type="table">
-    <columns>algo/prescale-index, 0:Emergency, 1:4b, 2:3b, 3:2b, 4:1b</columns
-    <types>string, uint, uint, uint, uint, uint</types>
+ <?xml version="1.0" encoding="UTF-8"?>
+ <!--TSG Tool v3.1 - uGT Prescale Generator-->
+ <!--Generated on Thu Apr 27 2017 11:53:58 GMT+0200 (CEST)-->
+ <!--from PrescaleCosmics_L1v6-->
+ <run-settings id="uGT">
+  <context id="uGtProcessor">
+   <param id="index" type="uint">0</param>
+   <param id="prescales" type="table">
+    <columns>algo/prescale-index, 0:Cosmics, 1:Cosmics + High Random, 2:Co
+    <types>string, uint, uint, uint, uint, uint</types>
```

Giuseppe Codispoti

Editor

Subsystem: CPPF
Section: Run Settings

Dashboard

```
1  <run-settings id="cppf">
2      <context id="processors">
3          <state id="Halted">
4              <mon-obj id="inputPorts" status="disabled" />
5          </state>
6          <state id="Engaged">
7              <mon-obj id="inputPorts" status="disabled" />
8          </state>
9          <state id="Synchronized">
10             <mon-obj id="inputPorts" status="disabled" />
11         </state>
12         <state id="Configured">
13             <mon-obj id="inputPorts" status="disabled" />
14         </state>
15         <state id="Aligned">
16             <mon-obj id="inputPorts" status="disabled" />
17         </state>
18         <state id="Running">
19             <mon-obj id="inputPorts" status="non-critical" />
20         </state>
21     </context>
22 <!--
23     <context id="AMC13">
24     <mask id = "amcports.amc01" />
25     <mask id = "amcports.amc02" />
26     <mask id = "amcports.amc11" />
27     <mask id = "amcports.amc12" />
28     </context>
29  -->
30
31     <context id="AMC13">
32     <mask id = "amcports.amc03" />
33     <mask id = "amcports.amc04" />
34     <mask id = "amcports.amc05" />
35     <mask id = "amcports.amc06" />
36     <mask id = "amcports.amc07" />
37     <mask id = "amcports.amc08" />
38     <mask id = "amcports.amc09" />
39     <mask id = "amcports.amc10" />
40     </context>
41
42     <context id="CPPFp1">
43     <mask id = "inputPorts.unused09" />
44     <mask id = "inputPorts.unused10" />
45     <mask id = "inputPorts.unused11" />
46     </context>
47     <context id="CPPFp2">
48     <mask id = "inputPorts.unused09" />
```

xml editor