R&D on high performance RPC for the ATLAS Phase-II upgrade

Yongjie Sun

State Key Laboratory of Particle detection and electronics

Department of Modern Physics, USTC

outline

- ATLAS Phase-II Muon Spectrometer upgrade
- RPC trigger detector
  - ✓ Requirements on performance
  - ✓ The main challenges
  - ✓ R&D on thin gap RPC
  - ✓ Current progresses
- Summary

LHC to HL-LHC

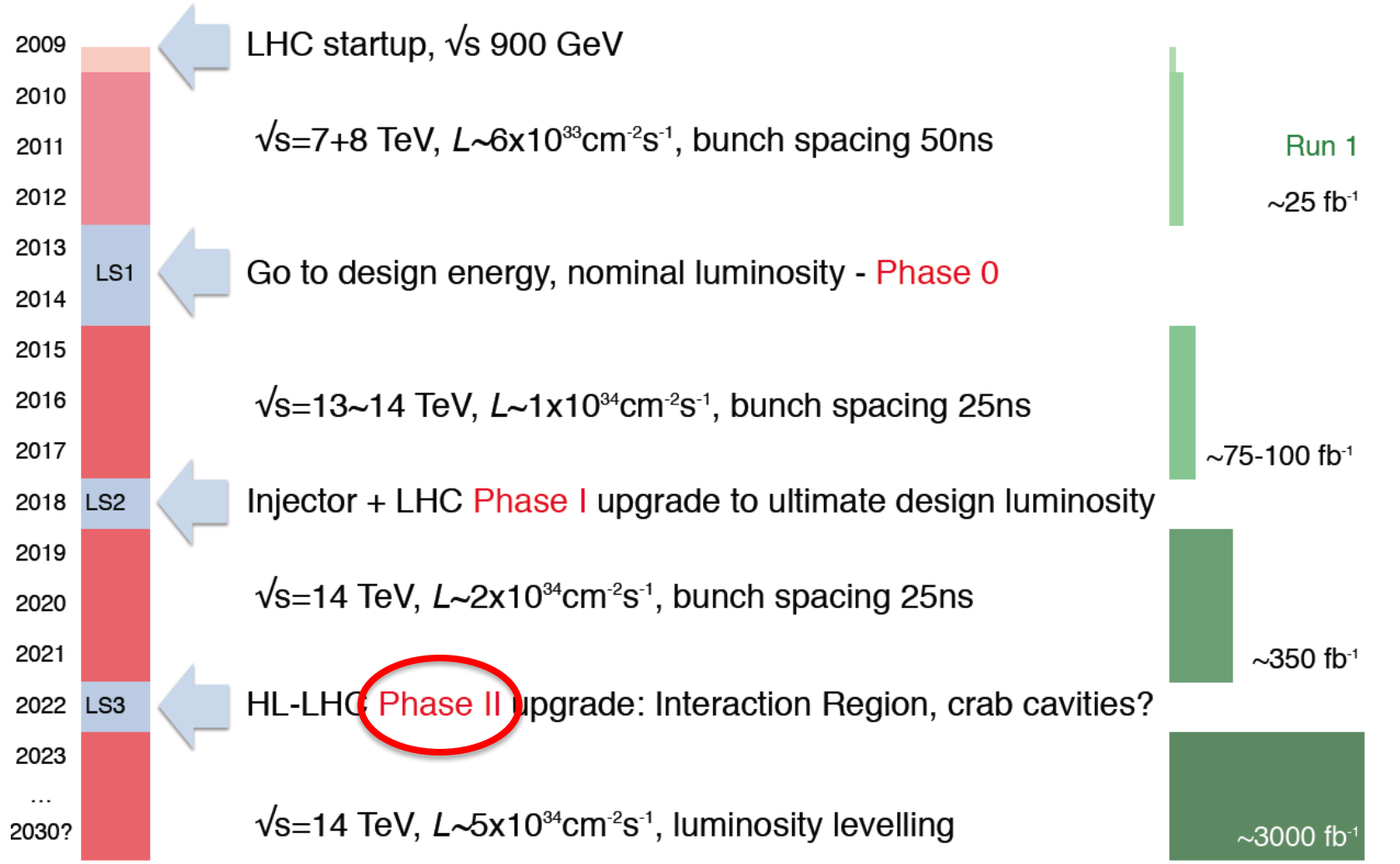
2009
2010
2011
2012
2013
2014
2015
2016
2017
2018
2019
2020
2021
2022
2023
…
2030?
LS1
LS2
LS3
LHC startup, √s 900 GeV
√s=7+8 TeV, L~6x10^33cm^-2s^-1, bunch spacing 50ns
Go to design energy, nominal luminosity - Phase 0
√s=13~14 TeV, L~1x10^34cm^-2s^-1, bunch spacing 25ns
Injector + LHC Phase I upgrade to ultimate design luminosity
√s=14 TeV, L~2x10^34cm^-2s^-1, bunch spacing 25ns
HL-LHC Phase II upgrade: Interaction Region, crab cavities?
√s=14 TeV, L~5x10^34cm^-2s^-1, luminosity levelling
Run 1
~25 fb^-1
~75-100 fb^-1
~350 fb^-1
~3000 fb^-1

ATLAS Phase-II upgrade

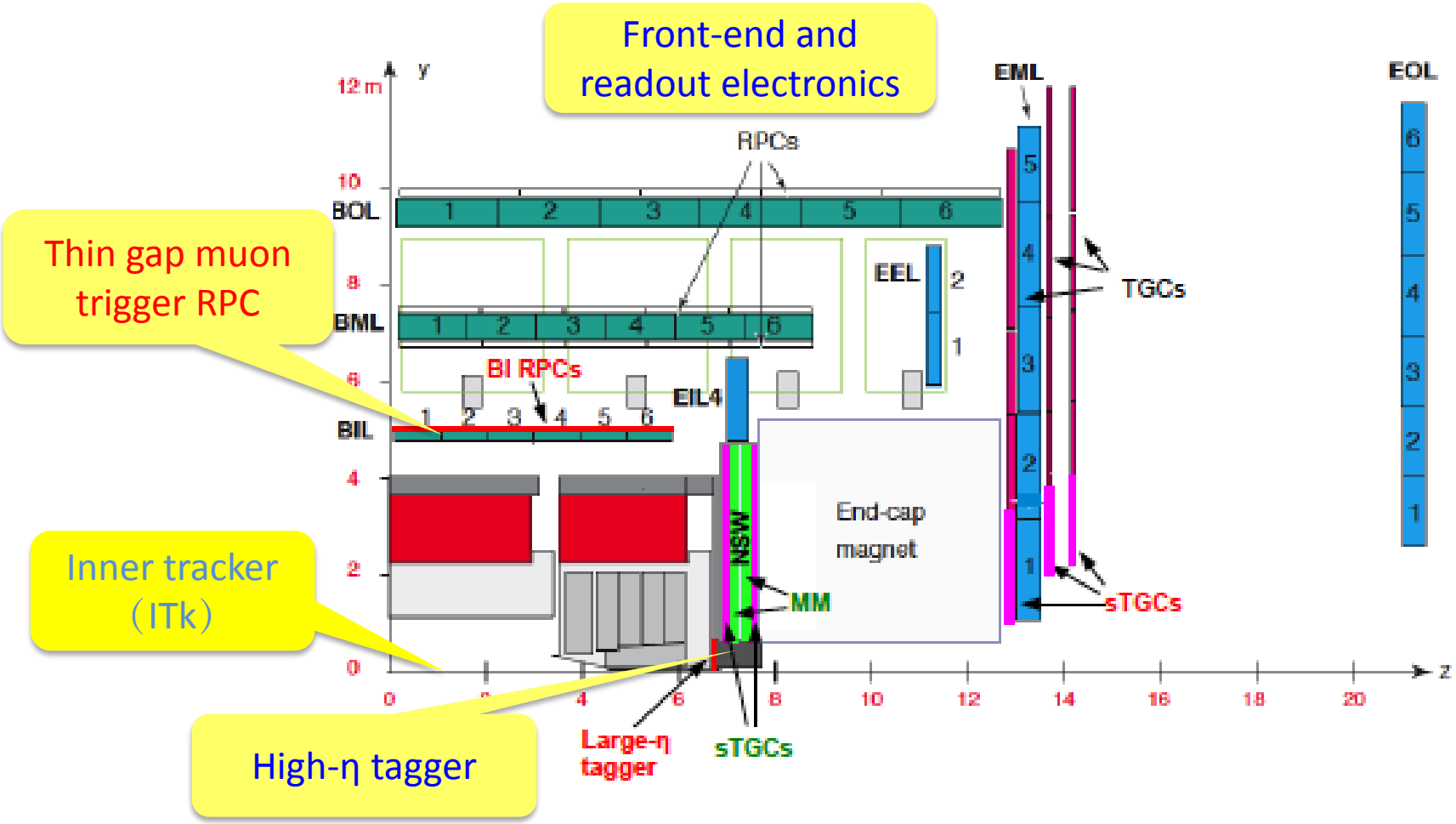

Current ATLAS RPC muon trigger system

- 6 layers RPC (BM and BO), measure η&ϕ position on each layer.
- OUTER LAYER (BO) for High p_T trigger
- MIDDLE LAYER (BM) for Low p_T trigger
- NO RPC on INNER LAYER (BI)）

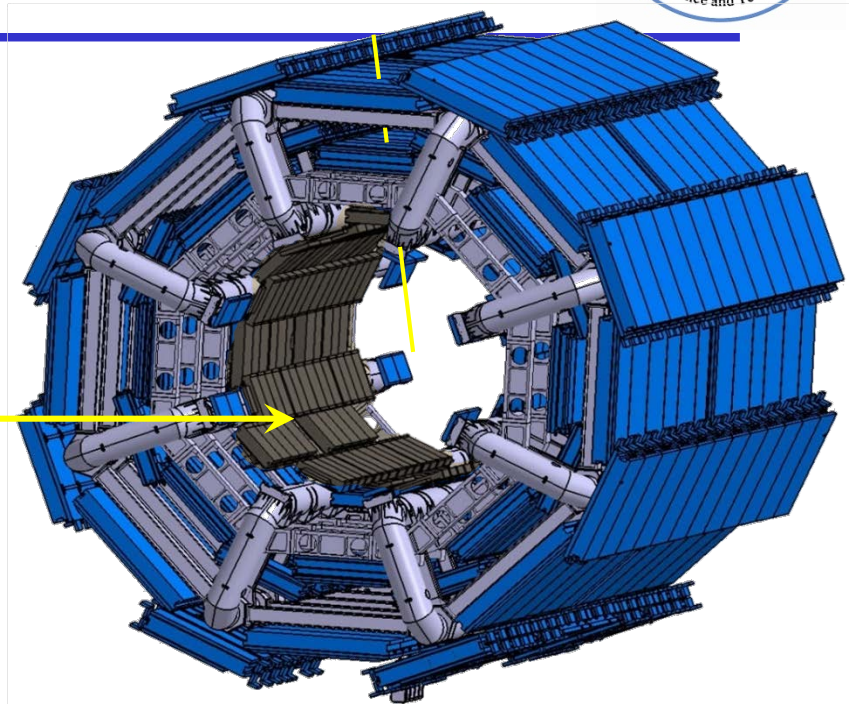

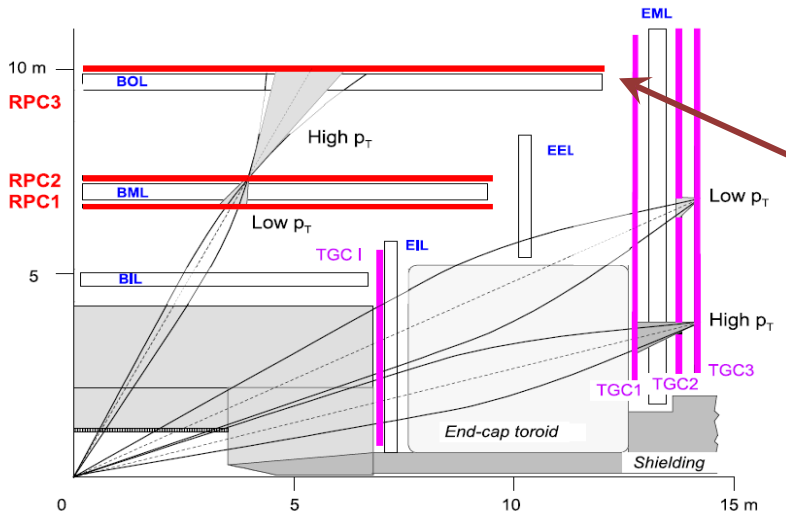

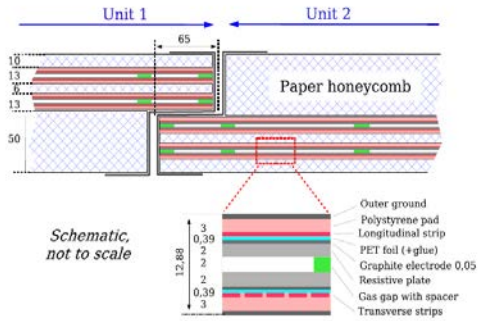

The main problems of current RPC

- **Longevity:**
  - Designed for work under 1×10^{34} $cm^{-2}s^{-1}$@14TeV for 10 years, corresponding to integrate charge of 0.3 C/cm^2
  - Reach the life time at HL-LHC
  - Can only work under lower voltage with detection efficiency lost of 15%-35%

$L=7\times10^{34}cm^{-2}s^{-1}$@14TeV

Sector Φ Id.	RPC unit Id. along Z direction -6.2	-6.1	-5.0	-4.0	-3.2	-3.1	-2.2	-2.1	-1.2	-1.1	1.1	1.2	2.1	2.2	3.1	3.2	4.0	5.0	6.1	6.2	Average
01.01	342	280	301	225	145	114	128	101		61	61	71	113	122	127	136	214	276	269	285	180
01.02	293	281	303	218	159	133	129	143		76	71	75	127	143	140	148	215	295	278	297	188
2	168	204	188	138	109	90	77	63	55	56	45	48	61	79	94	104	140	207	196	152	115
03.01	297	296	281	198	148	128	119	119	68	67	65	71	131	125	114	125	207	329	268	290	177
03.02	300	243	277	230	151	129	155	122	85	75	75	70	122	127	152	132	207	315	243	299	179
4	112	196	154	151	101	81	65	77	41	53	46	41	71	68	92	108	160	196	175	112	101
05.01	171	178	263	138	105	102	140	127	68	60	60	69	124	177	102	117	185	290	173	171	149
05.02	227	198	237	158	109	105	126	143	77	61	63	71	111	136	108	141	200	267	255	282	159
6	175	186	208	163	105	95	90	95	77	59	52	59	84	81	106	124	189	200	227	167	131
07.01	305	263	288	191	154	129	131	114		76	78		122	189	124	148	185	261	268	305	183
07.02	327	258	216	203	141	112	129	108		74	77		105	114	112	152	184	278	276	279	175
8	146	195	195	161	103	85	80	70	50	57	54	54	67	74	85	108	168	196	194	156	118
09.01	319	246	301	206	155	117	149	119		65	64		106	134	124	135	197	283	262	297	181
09.02	342	258	287	205	143	95	107	103		58	67		99	112	95	117	188	285	265	292	174
10	174	201	207	147	99	86	68	71	46	43	41	50	64	69	80	103	148	193	201	170	115
11.01	308	244	237	157	97	84	81	87		40	43		83	94	92	91	148	227	215	278	132
11.02	196	193	157	105	78	66	55	57		33	31		50	62	58	71	98	151	160	185	98
12						80	81	66	53	36	36	51	75	87	80						64
13.01	291	278	253		140	102	99	84	43	41	47	50	87	95	99	123		249	263	319	149
13.02	259	264	262		104	97	105	86	49	48	50	56	93	103	97	110		252	227	294	146
14						142	68	64	52	41	40	49	53	68	136						76
15.01	196	221	148	113	76	71	67	49		38	36		50	59	86	87	104	156	173	196	104
15.02	183	159	246	164	116	98	103	75		44	43		75	106	112	107	158	248	159	183	133
16	173	214	216	173	108	89	54	75	56	59	50	50	77	54	87	103	177	239	208	154	124
Average	229	228	234	167	118	101	96	88	56	52	51	56	86	97	103	118	171	240	221	221	137

- **The rate capability:**
  - Under HL-LHC, the extrapolated rate on RPC will be an order of magnitude higher, ~300Hz/cm^2

- **Basic solution:**
  - Add 3 BI RPC layers
  - Rate: ~ kHz/cm^2, work 10 years for HL-LHC
  - With higher spatial and time resolution for muon tracking and bunch crossing ID
  - Close most of the acceptance holes

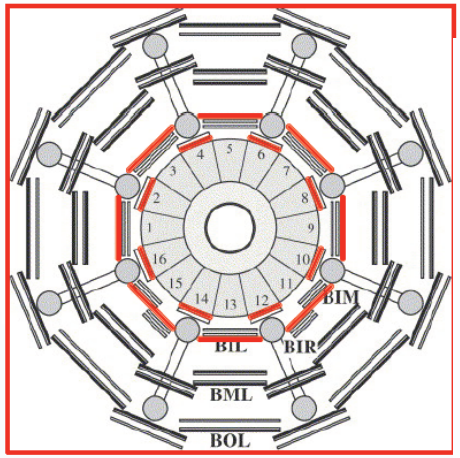

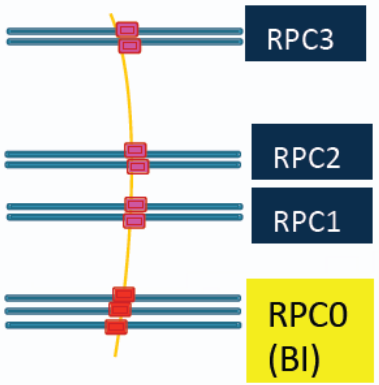

The basic requirements

- Higher rate capability: ~ kHz/cm^2
- Longer longevity: 10 years of HL-LHC
- Higher spatial resolution: ~ mm
- Higher time resolution: ~0.5ns

Current RPC detector:

- 2 mm gas gap, with avalanche mode → 1 mm
- Work voltage: 4.8 kV/mm → ~2.7 kV
- Charge: 30 pC/count
- Rate: 100 Hz/cm^2
- Time resolution: 1.1 ns → 0.5 ns
- Strip pitch: 26-35 mm
- FEE: GaAs technology → Si BJT → SiGe
- Gas component: Freon, Iso-butane, SF6

Main challenges

- More sensitive, high signal-to-noise ratio, fast, low power consumption Front End Electronics
- New materials for a thinner and more rigid chamber structure
- Increasing the signal-to-noise ratio by optimizing the gas gap and readout panel structure
- Optimizing the detector parameters for maximizing spatial and time resolution, thus momentum resolution, and track-to-track separation.
- Looking for new environment friendly gas mixture.

R&D on thin gap RPC

- Supported by the MOST National key research and development program, USTC, SDU and SJTU started the R&D on thin gap RPC for ATLAS Phase-II upgrade.
- Mainly focus on:
  - New electrode material, gas gap structure, readout material and structure, working conditions.
  - Join the FEE and readout electronics design.
  - Simulation, design and test RPC prototypes, achieve the required performances.
  - Built and test real size RPC detector.
  - Establish the assembly and test procedure, quality control and assurance, get ready for the mass production

Main progresses

- Thinner gas gap, thinner structure and very sensitive FEE introduces many problems for RPC operation.
  - The gas ionization and avalanche process
  - The signal induction
  - Signal transport
  - Impedance matching
  - Shielding and GND connection
  - Gas flow and mechanical problems
- Simulation work already started together with the test of the BIS78 prototypes.

Simulation on cross-talk

- Join the BIS78 assembly, beam test and data analysis.
- Simulated the cross-talk observed from test results.

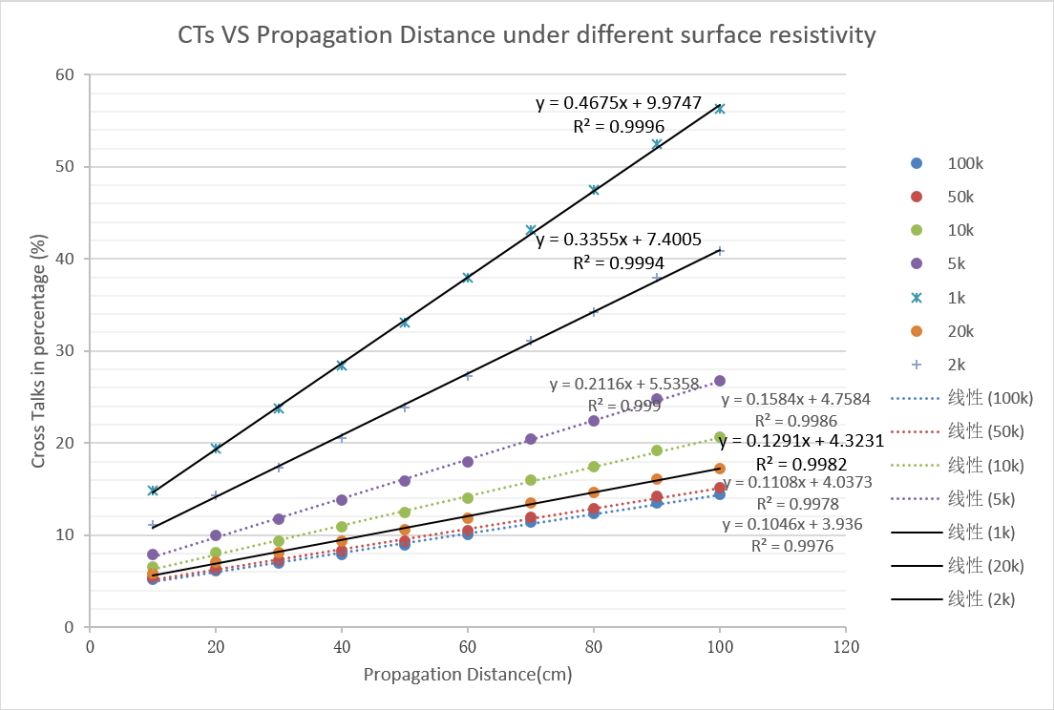

Simulation of signal propagation in RPC for Atlas Phase II Upgrade
--Xiangyu XIE

Relation between Cross Talk and propagation distance and HV layer resistivity

Prototype assembly and test

- BIS78 similar gas gaps has been built with the same material, same technology.
- RPC counter will be built for performance test.

➢ The idea is to start from the BIS78-like technology and get comparable results, then start our own:

  – Readout pattern R&D: material, new design…
  – New gas mixture performance test.
  – Optimize the assembling, shielding, mechanical structure….
  – Built real size detector for phase-II upgrade

Summary

- Supported by MOST, we take part in the ATLAS Phase-II muon trigger RPC upgrade.
- Following the pilot work of Phase-I BIS78 upgrade, the simulation and prototype assembly has already started.
- We will deeply explore any possibilities to extend the potential of RPC, fulfill the requirements of the upgrade.
- Take the responsibility and make real contributions to the ATLAS collaboration.

Thank you!