Large cryogenic system at IHEP

Shaopeng Li

On behalf of IHEP cryogenic team

Institute of High Energy Physics (IHEP), CAS, CHINA

Third Asian School on Superconductivity and Cryogenics for Accelerators (ASSCA2018), IHEP, Beijing, China, 9-17 December 2018

Outline

- Brief introduction of cryogenic systems at IHEP
- In operation
  - BEPCII cryogenic system
  - ADS Injector I cryogenic system
  - CSNS cryogenic system
- Under construction
  - PAPS cryogenic system
  - HEPS cryogenic system
- Under planning
  - CEPC cryogenic system
- Summary

Brief introduction of cryogenic systems at IHEP

- **BEPCII cryogenic system is the first cryogenic system at IHEP, which was built from 2004 to 2007. So far, the superconducting cavities and superconducting magnets have been operating steadily for 10 years.**
- **ADS injector I 2K cryogenic system was completed in 2015, providing 4K/2K vertical test of dozens of superconducting cavities and the operation of two cryomodules with beam.**
- **CSNS cryogenic system is a 20K supercritical hydrogen system, which was completed and put into operation in 2017.**

Brief introduction of cryogenic systems at IHEP

- **PAPS cryogenic system is also a 2K cryogenic system, providing the R&D of various superconducting cavities. The system will be completed in 2020.**
- **HEPS project will adopt five 166.6MHz single cell SC cavities and two 499.8MHz third harmonic SC cavities. The project will start at the end of 2018 and is scheduled to be completed in 2025.**
- **CEPC cryogenic system is currently in the stage of conceptual design and the R&D of key equipment. It is expected to been constructed from 2022.**

BEPCII cryogenic system

BEPC & BEPCII

- Beijing Electron Positron Collider :
  - Constructed: 1984-1988
  - BESI: run from 1989-1998
  - BESII: run from 1999-2004
- Upgraded (BEPCII):
  - 2004-2007
  - BESIII: run from 2008

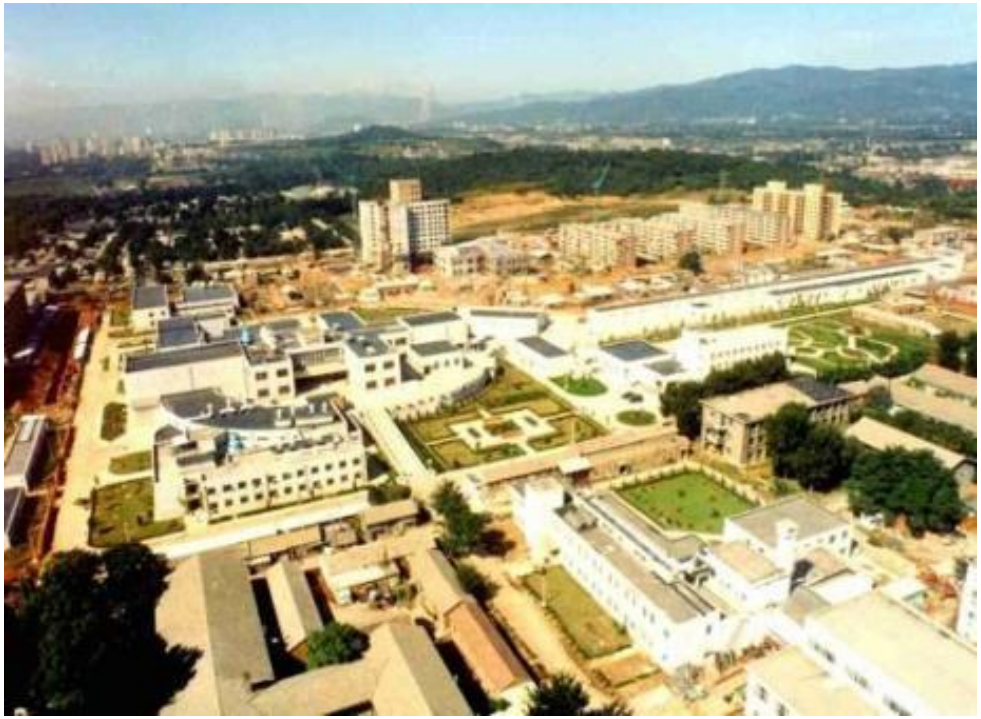

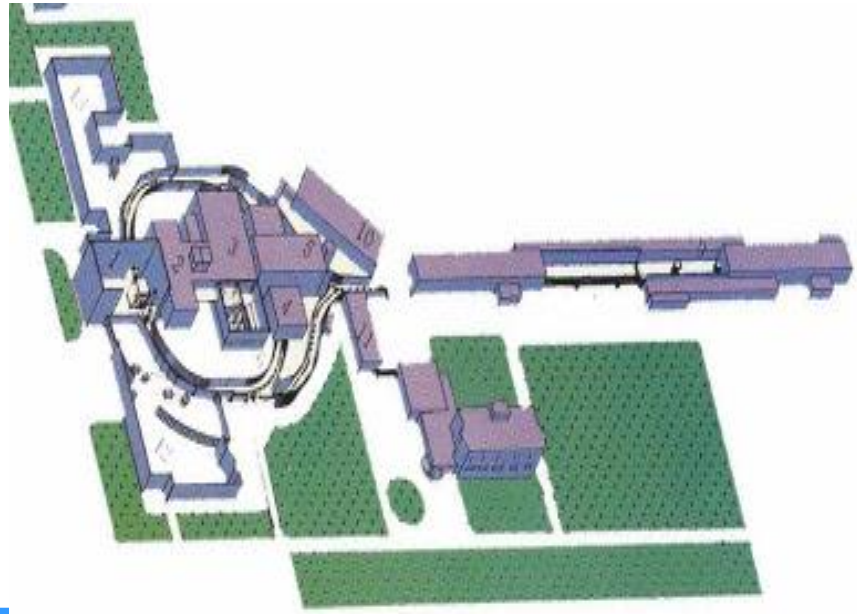

Layout of BEPCII cryogenic system

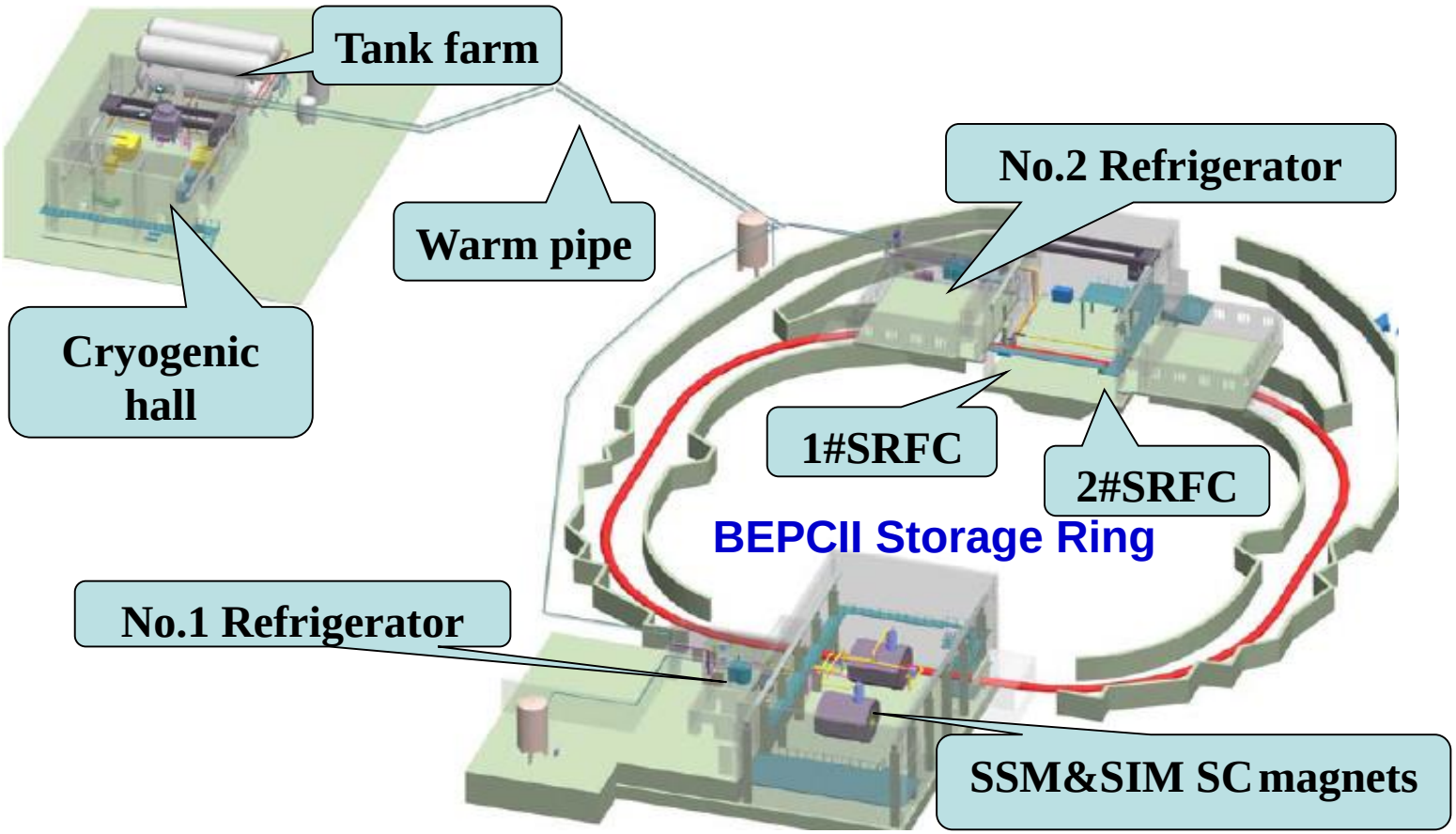

BEPCII SC RF Cavity

Modified KEKB Type Damped Cavity

Frequency: 499.8MHz

Working temperature: 4.5K

Pressure Stability: ±3mbar

Liquid Level Stability: ±1%

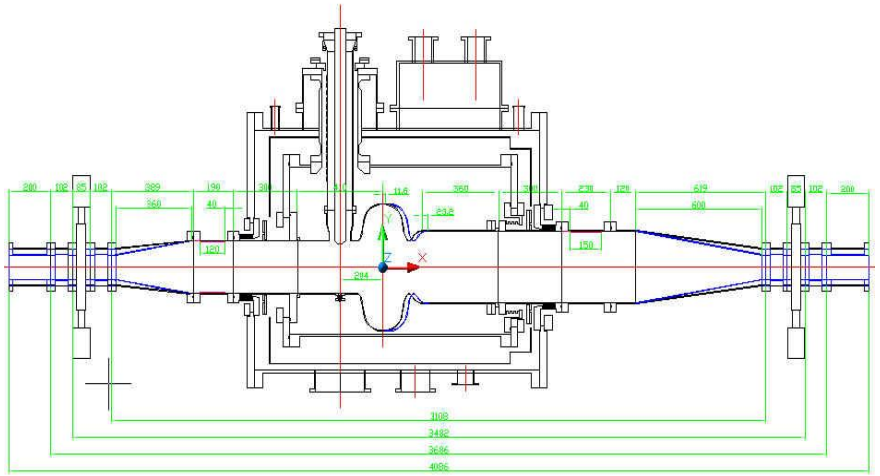

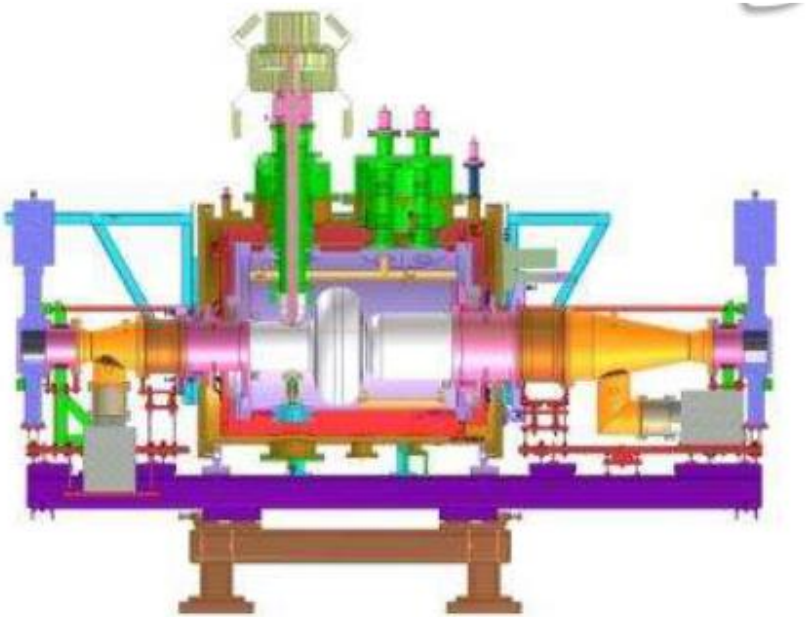

SC Insertion Quadrupole Magnet

Composed of six magnets:
Dipole magnet(SCB), Anti-solenoid(A-SOL)
Quadrupole magnet(SCQ), Horizontal dipole correction magnet(HDC)

Vertical diapole correction magnet(VDC), Skew quadrupole magnet(SQC)

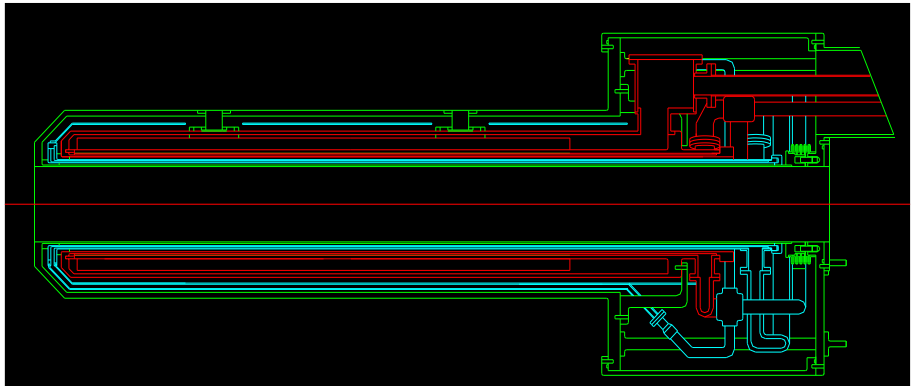

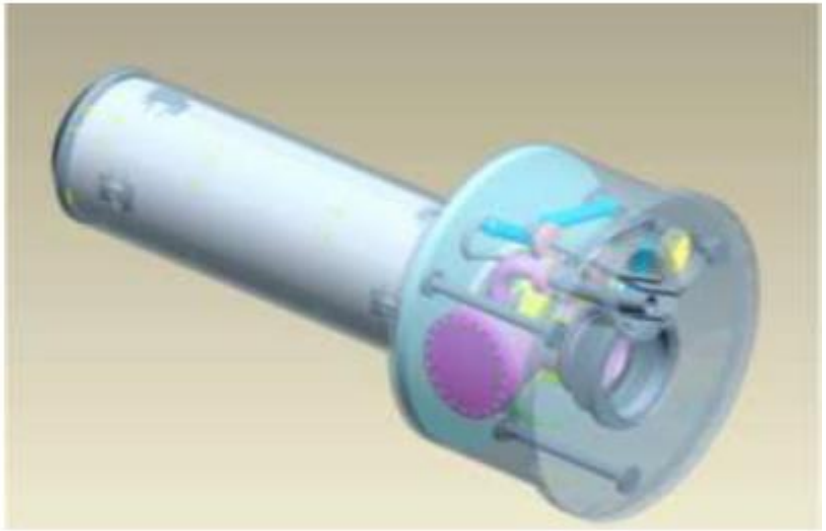

BESIII SC Solenoid Magnet

- Center field: 1Tesla
- Length: 3.89m
- Outer diameter: φ3.4m

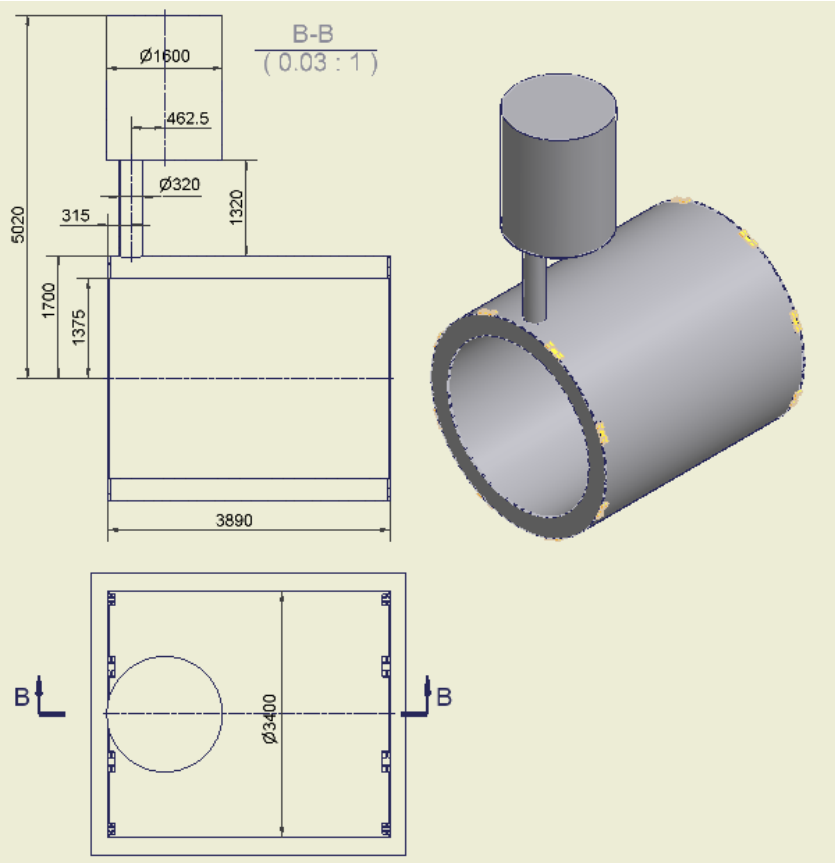

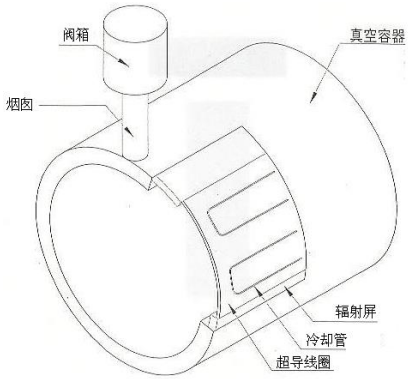

图1 超导磁铁外观图

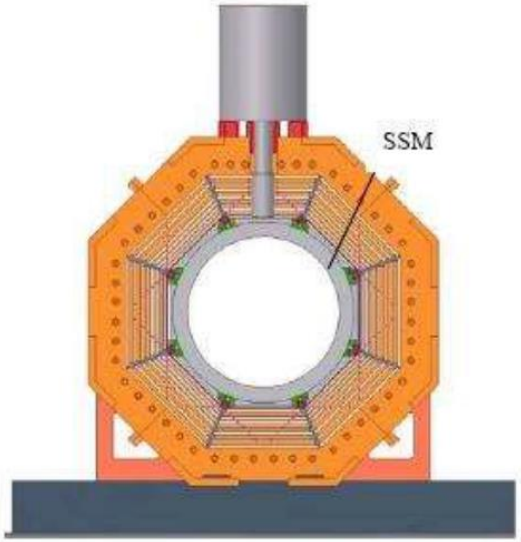

Heat Loads of SC Cavities cryogenic system

SRF static heat load（W）		2×30
Dynamic heat loads	RF loss（W）	2×84
	coupler（W）	2×12
Common parts	Distribution valve box（W）	20
	Cryogenic transfer lines（W）	24
	Helium dewar and heaters（W）	30
Margin 20% （W）		65.2
Total（W）		391.2W

Flowchart of SC cavity cryogenic system

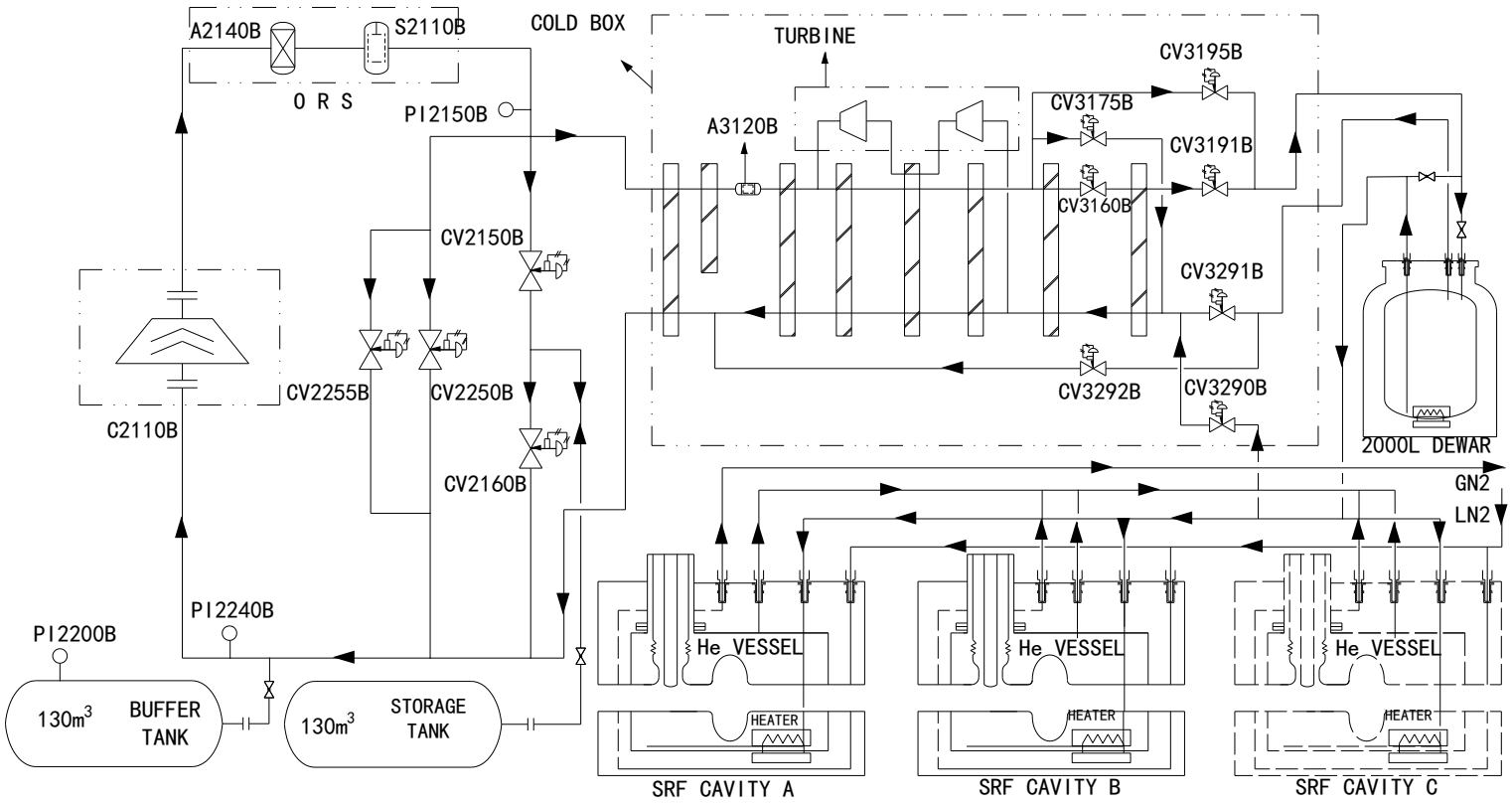

Heat loads of SC magnet cryogenic system

Cryogenic devices	SCQ×2	SSM
Cryostats for magnets	15×2	25
Current leads	0.3g/s×2	0.4g/s
Eddy current loss		15
Valve boxes for magnets	9×2	15
Cryogenic transfer lines	35	23
1000L Dewar& Valve Box	30	
Subcooled heat exchanger	20	
Subtotal	211+1g/s	
Margin	30%	
Total	274.3 W+1.3 g/s	

Flowchart of SC magnet cryogenic system

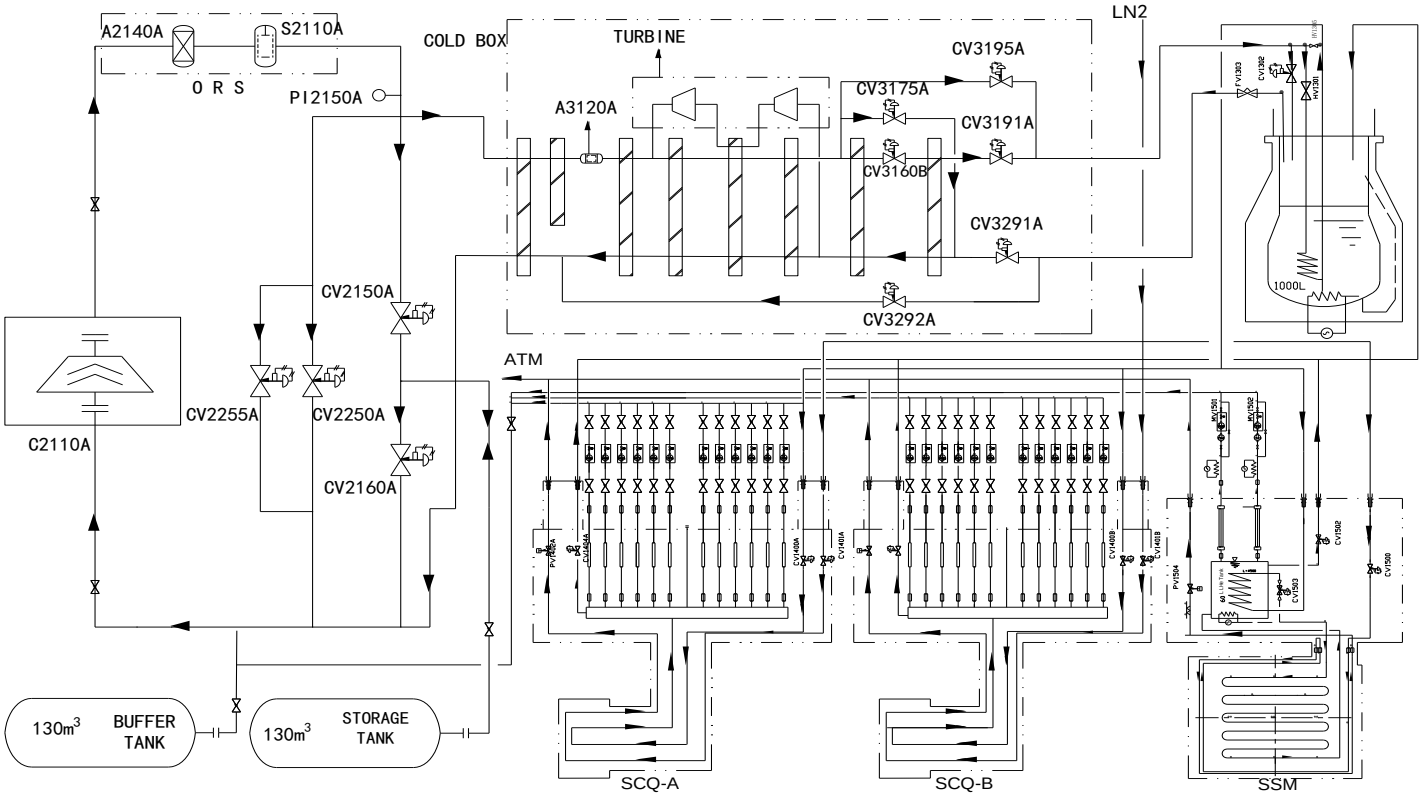

TCF50s refrigerator

Main Parameters of refrigerator

Cooling Capacity	500 W @4.5 K
HP	13.4 bara
LP	1.05 bara
He mass flow rate	80 g/s
LN_2 consumption	60L/h

Main Parameters of 2000L LHe Dewar

Capacity	2000 L
Boil off rate	< 1 %
Working pressure	1.3 bara
Electric heater power	500 W

- **TCF50s refrigeration system is based on a 2-turbine-in-series Claude cycle which is a combination of a Brayton and Joule Thomson cooling cycle.**
- **This refrigerator is made by LINDE, Switzland.**

Installation of 500W/4.5K refrigerators

The installation process includes:

- Removing the internal and external transportation support
- Carrying out the vacuum leak testing and establishing the heat insulation vacuum.
- Refrigerator installation in position


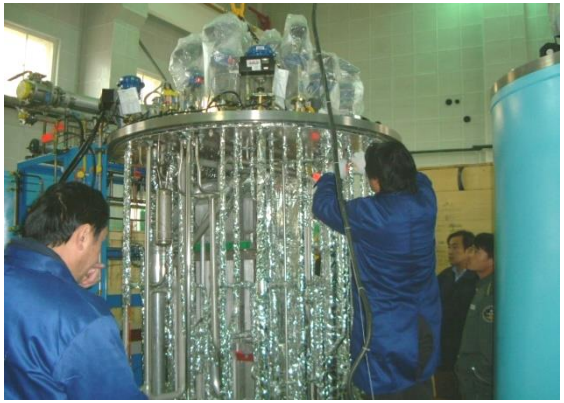


Piping work

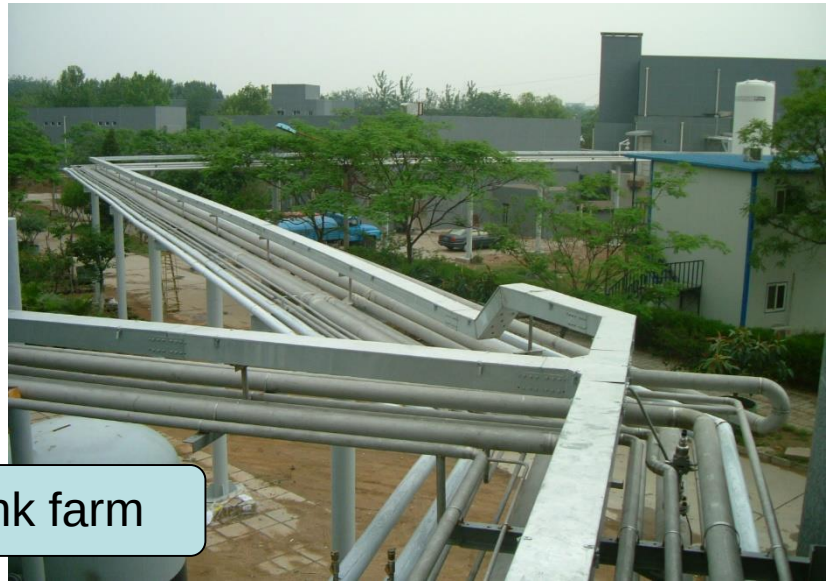

Tank farm

Cryogenic transfer-line

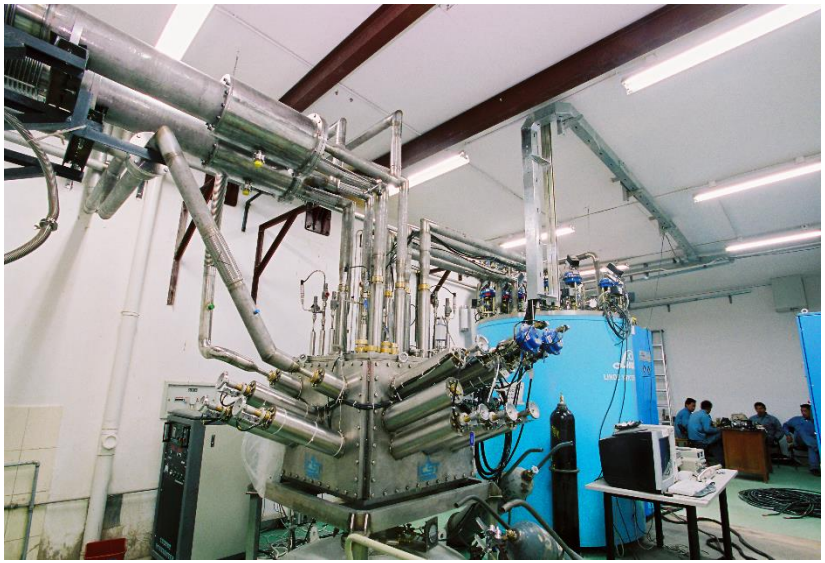

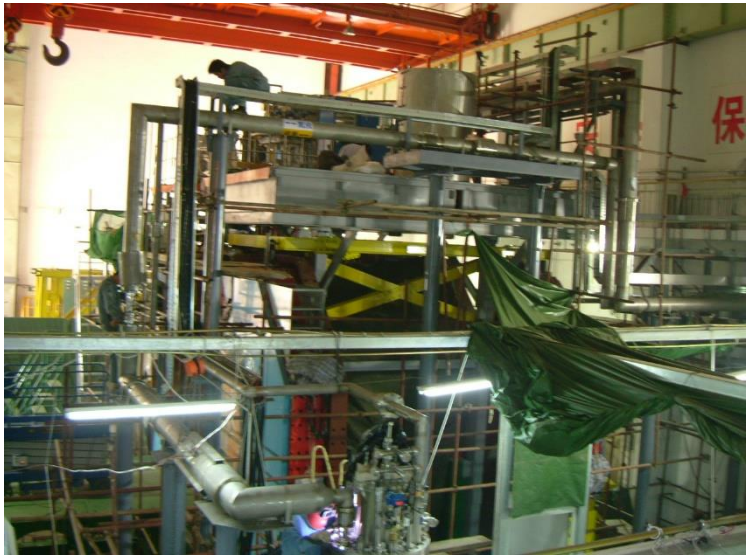

Commissioning of refrigerator

- The Liquefaction capacity is tested by the change of helium level.

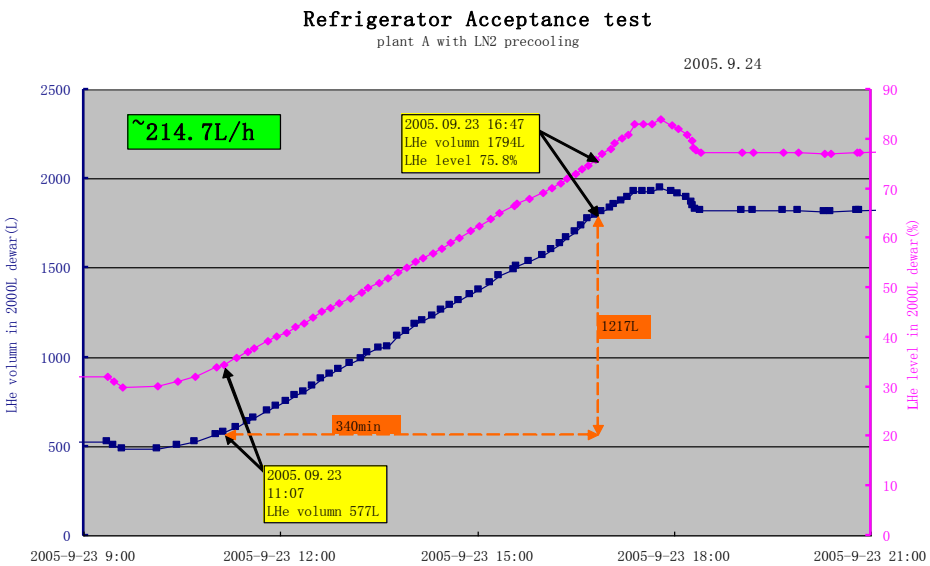

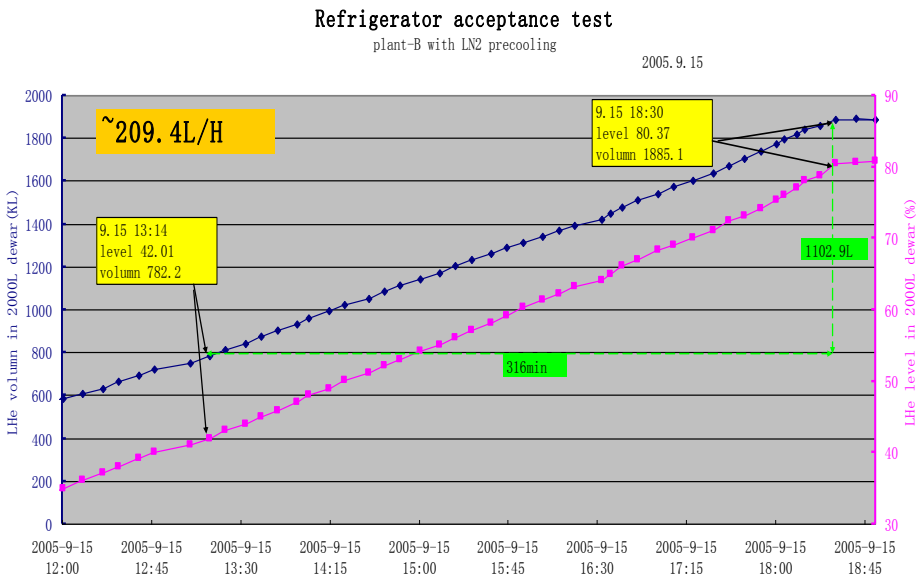

	plant A （L/h）		plant B （ L/h）	
LN2 precooling	without	with	without	with
Guarantee value (L/h)	60	150	60	150
Test result (L/h)	70.9	214.7	62.9	209.4

Performance test for TCF50s refrigerator

- The refrigeration capacity is tested by the heat load in the dewar.

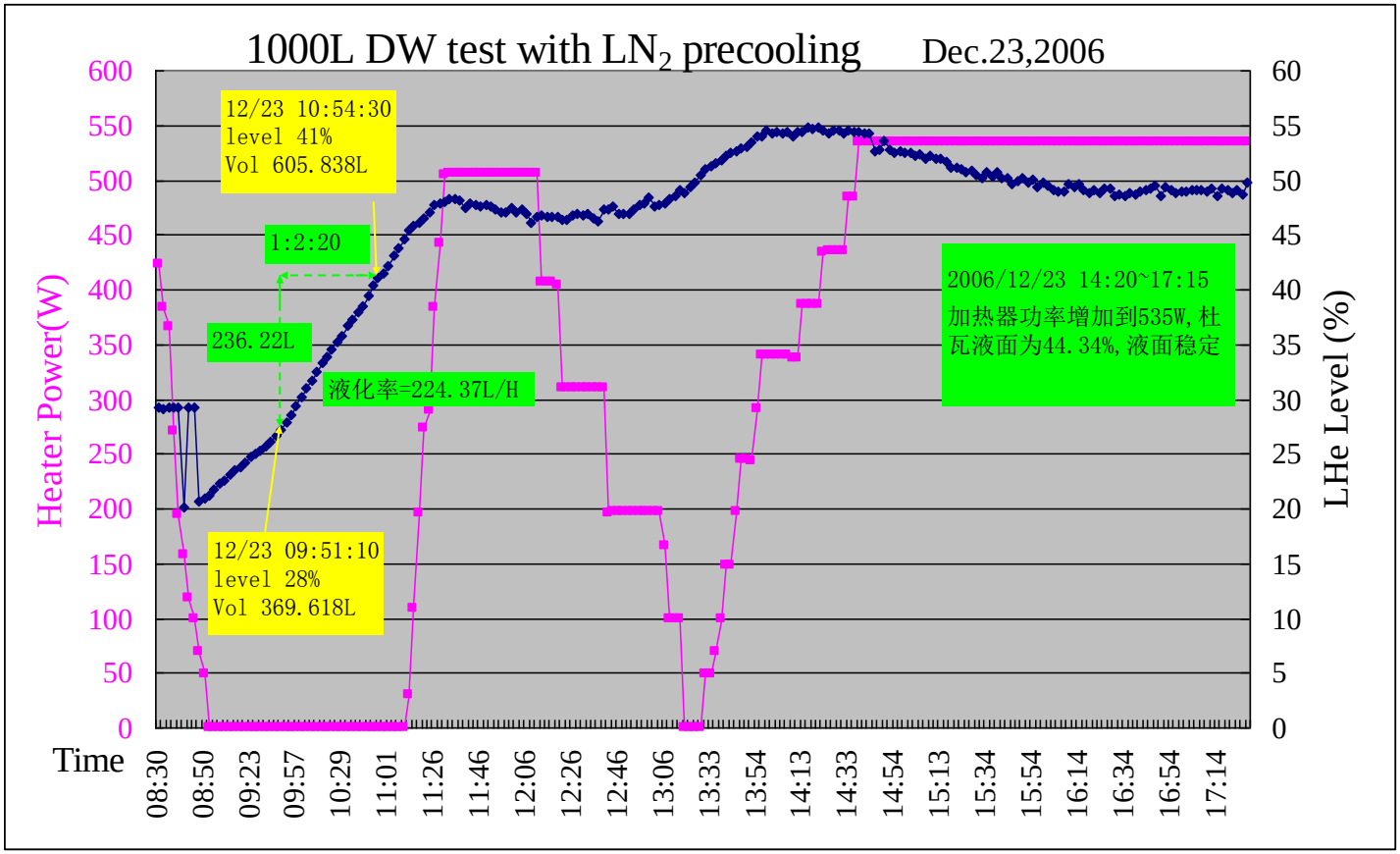

Typical cooldown and warm up curve of BEPCII SC RF cavities

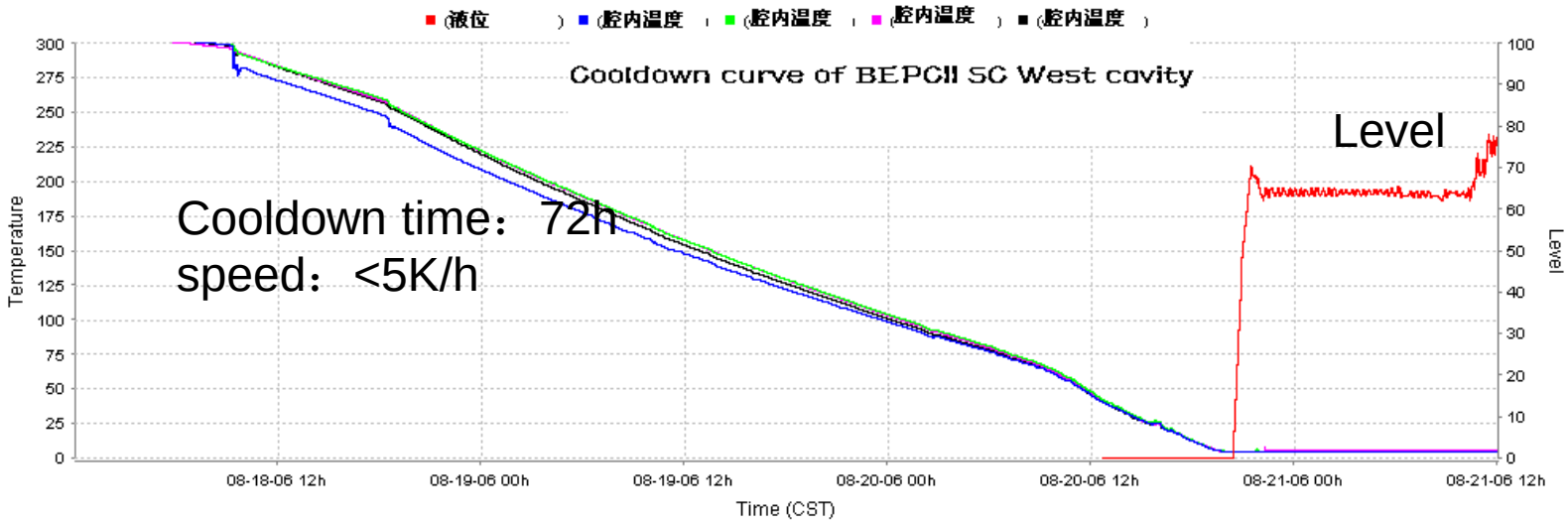

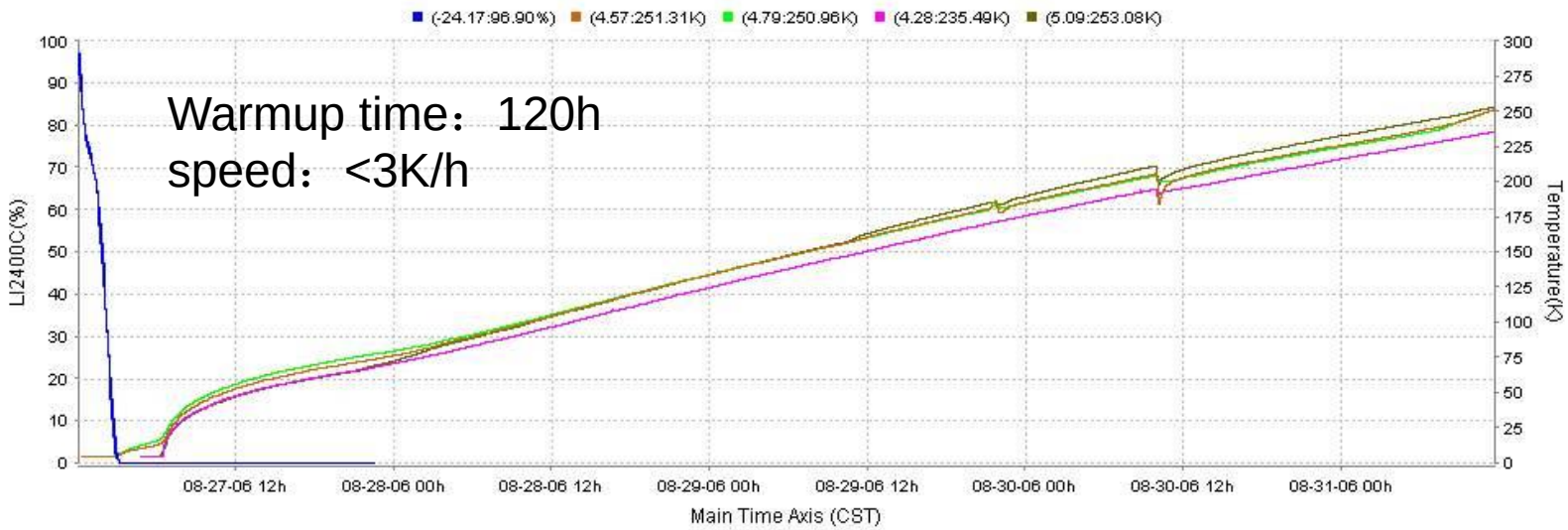

Exciting the magnets

Superconduct Current

TagName	Value	TagName	Value
ASL	1200.229	ASR	1170.102
AS2L	38.757	AS2R	38.840
AS3L	38.828	AS3R	38.828
SCQL	534.200	SCQR	532.802
SSKQL	43.659	SSKQR	44.004
HDCL	43.998	HDCR	44.045
VDCL	43.994	VDCR	43.665
SCBL	-0.106	SCBR	0.018

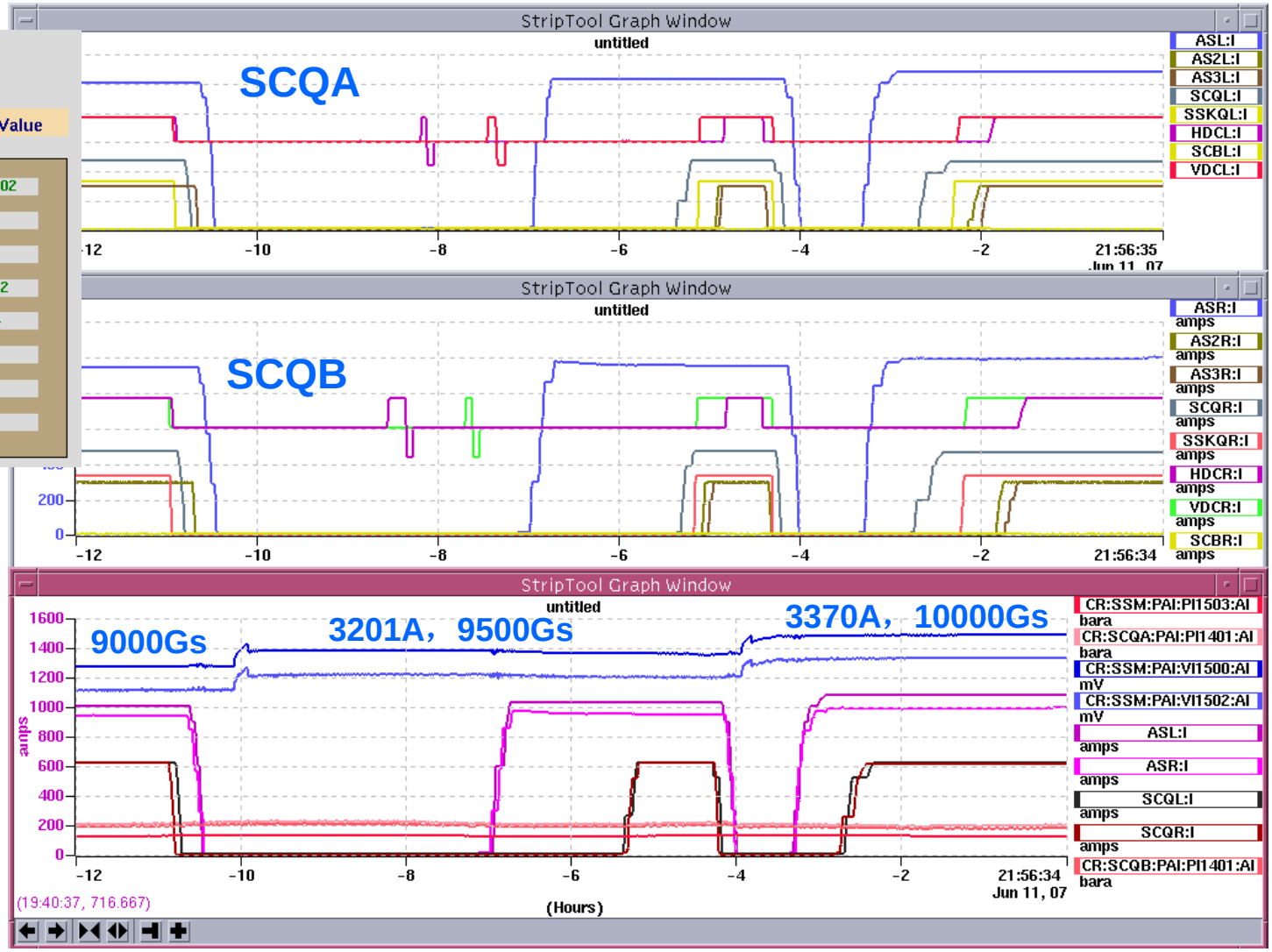

Milestone of BEPCII cryogenic system

- Nov. 2001 to May 2002 — Conceptual design
- Feb. 2003 to Feb. 2005 — Engineering Design
- Feb. 2003 to May 2005 — Standard equipment procurement
- Nov. 2004 to Aug. 2006 — Non-standard equipment manufacture and installation
- May 2005 to Sept. 2005 — Acceptance tests for two 500W@4.5K refrigerators
- May 2006 to Aug. 2006 — Commissioning and Cryogenic test for SRFC cryogenic system
- Nov. 2006 to now — SRFC cryogenic system operation
- Sept. 2006 to Dec. 2006 — Modification for 1000L Dewar & Valve Box
- Sept. 2006 to Apr. 2007 — Modification for SCQA/B valve boxes and current leads
- May 2007 to Jun. 2007 — SCQA/B & SSM cryogenic system commissioning
- Jun. 2007 to now — SCQA/B & SSM cryogenic system operation

ADS Injector I cryogenic system

ADS Injector I Project

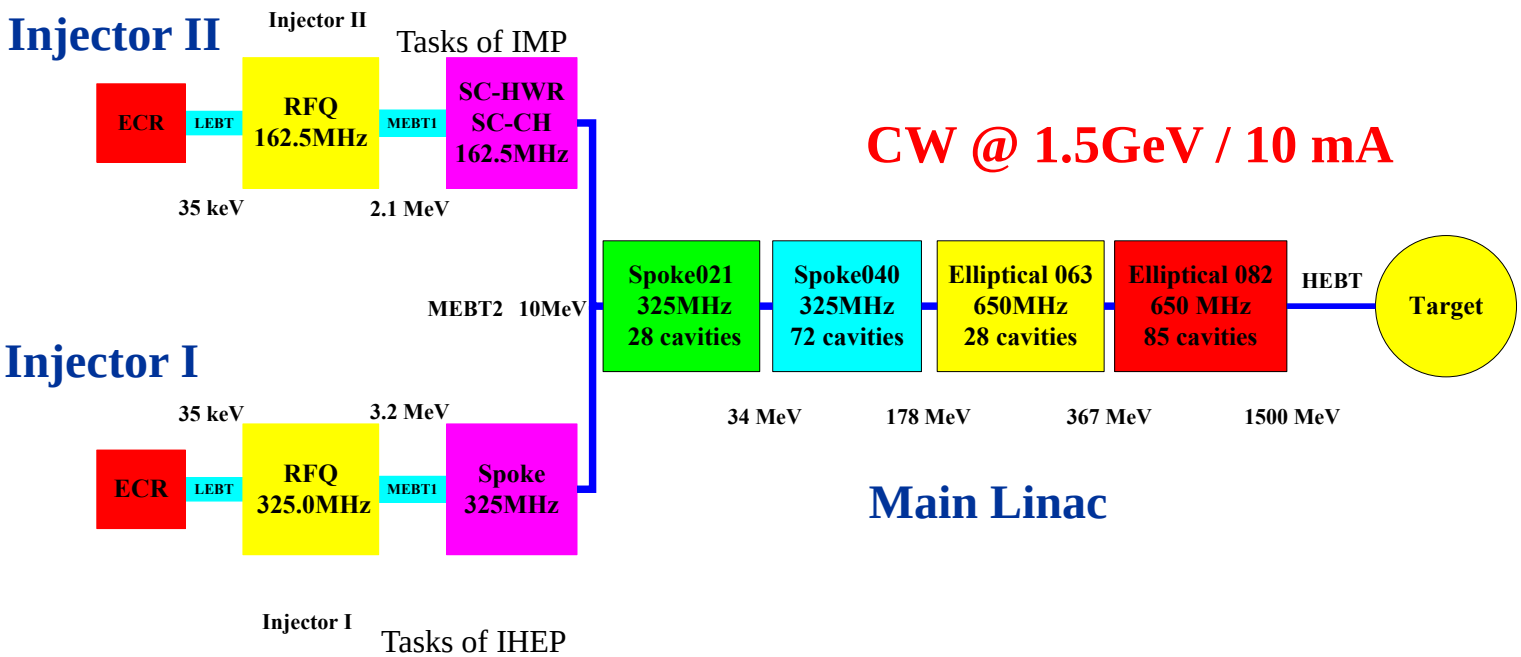

- **Chinese ADS proton linear has two 0~10MeV injectors and one 10~1500MeV superconducting linac.**
- **Injector I and Injector II were constructed by Institute of High Energy Physics (IHEP) and Institute of Modern Physics (IMP) respectively.**

Construction Goals of Cryogenic system for IHEP-ADS Injector I

- **Construction of a 2K vertical test stand and a 2K horizontal test stand for the performance test of SC cavities at IHEP;**
- **Construction of a 2K cryogenic system to meet the requirements of SC spoke012 cavities and SC magnets. The total equivalent capacity is about 1000W@4.5K;**
- **Construction of a helium gas recovery and purification system with the capacity of storage helium gases of 20000m3 and purification capacity of 100m3/h.**

Layout of IHEP-ADS cryogenic system(Building1#）

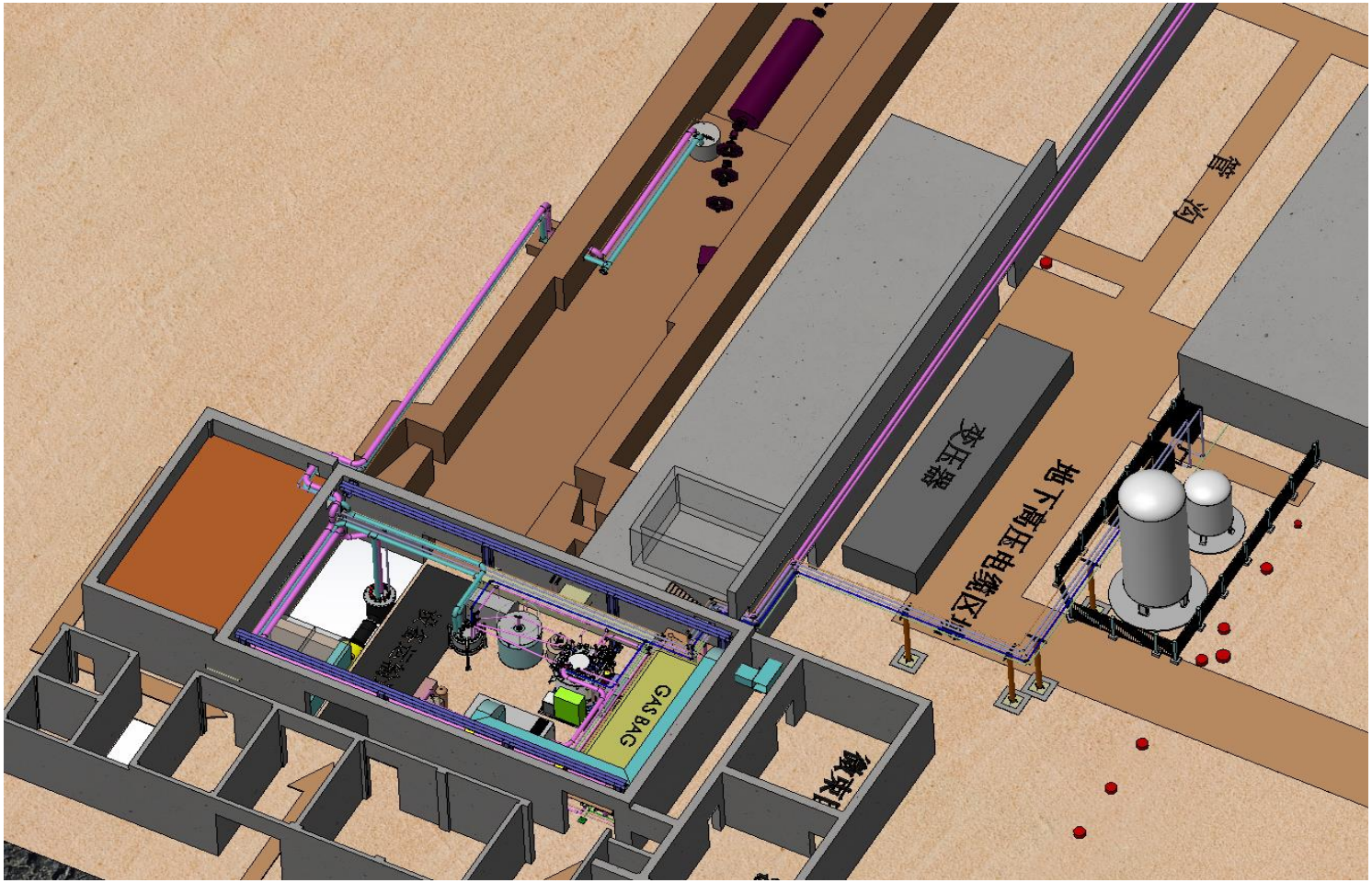

Plan of ADS injector I

1

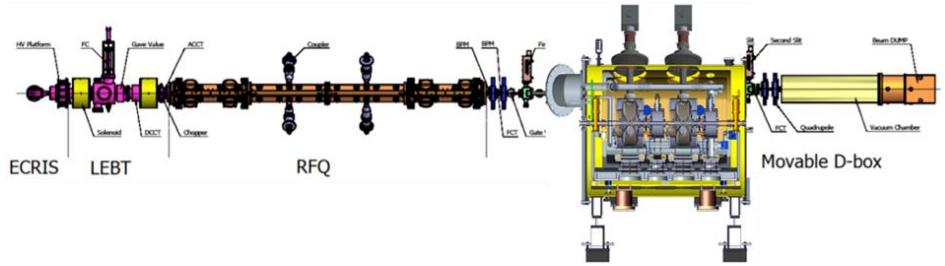

- ECRIS + LEBT + RFQ + MEBT + TCM
- 4.0 MeV
- July, 2015

325 MHz Spoke012，TCM

2

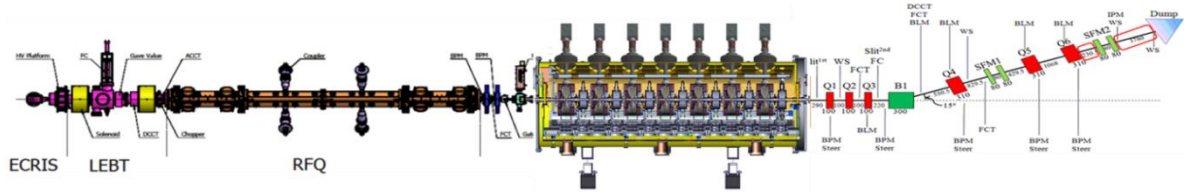

- ECRIS+LEBT+RFQ+MEBT+CM1
- 5 MeV
- December, 2015

325 MHz Spoke012，CM1

3

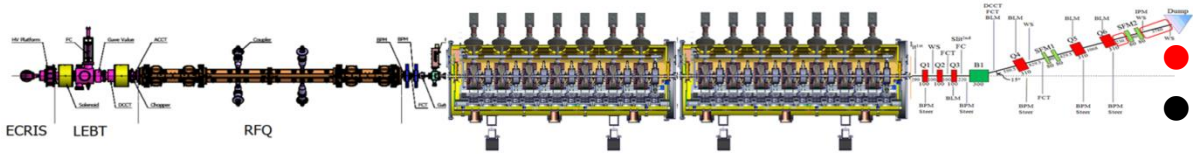

- ECRIS + LEBT + RFQ + MEBT + CM1 + CM2
- 10 MeV
- June, 2016

325 MHz Spoke012，CM1+CM2

Heat loads of ADS injector I cryogenic system

IHEP-ADS equipment:

- 3000L dewar
- 4.2K Distribution valve box
- 2K coldbox
- 4K/2K cryogenic transferline
- Operation Cryomodule (OCM)
- Horizontal Cryomodule (HCM)
- Vertical test dewar（DW）

Heat loads

IHEP-ADS equipment	80K (W)	4K (W)	2K (W)
4.2K Distribution valve box		26	
4K cryogenic transferline		30	
2K Coldbox		17	5
2K cryogenic transferline		5	2
Operation Cryomodule (OCM)	2×267	2×57.5	2×21
Total capacity	534	193	49
Total (redundancy 50%）	801	289.5	73.5
equivalent to 4K		657	

ADS refrigerator from Air Liquide

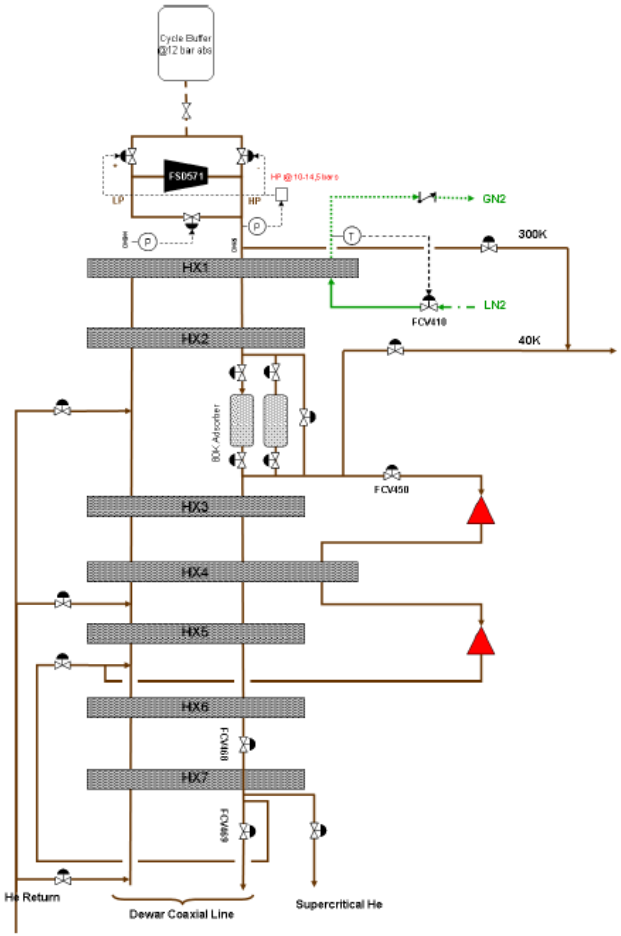

Main parameters of Air Liquide 1kW @4.5K refrigerator

Performance	Guaranteed Values	Expected Values
1. Refrigeration With LN2	**> 1000W@4,5K** **P_{dewar} = 1,3bar** **abs +/- 2 mbar**	> 1050W@4,5K LN2 consumption =30 L/h
2. Liquefaction With LN2	**>284L/h**	> 290L LN2 consumption =130 L/h
3. Refrigeration & Liquefaction With LN2	>350W@4.5K&200L/h	>370W@4.5K&210L/h
4. Refrigeration Without LN2	> 720W@4,5K Pdewar = 1,3bar,abs +/- 2 mbar	> 750W@4,5K
5. Liquefaction Without LN2	>90L/h	> 95L/h
6. Refrigeration & Liquefaction Without LN2	>250W@4.5K&70L/h	>275W@4.5K&70L/h

Test and Commissioning

- 2K was firstly achieved with TCM cryomodule on the February 4th, 2015.

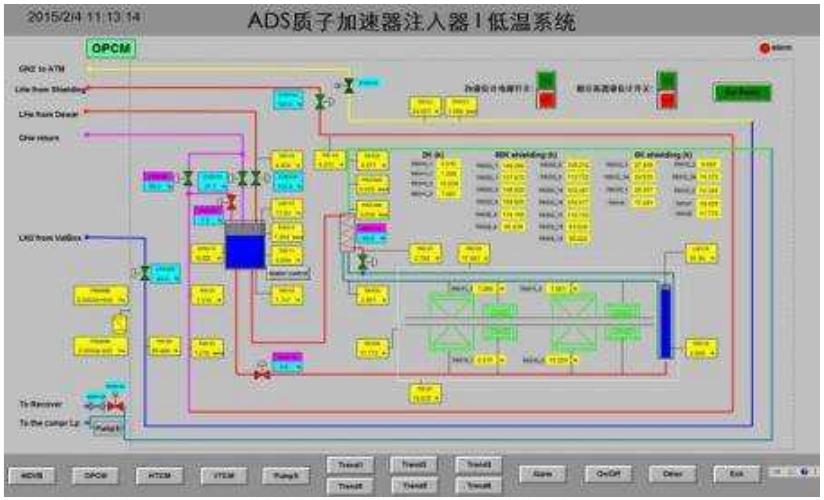

Operation status for CM1+CM2

- The CM1 and CM2 cryomodules operated steadily. The pressure fluctuation was less than 10Pa.

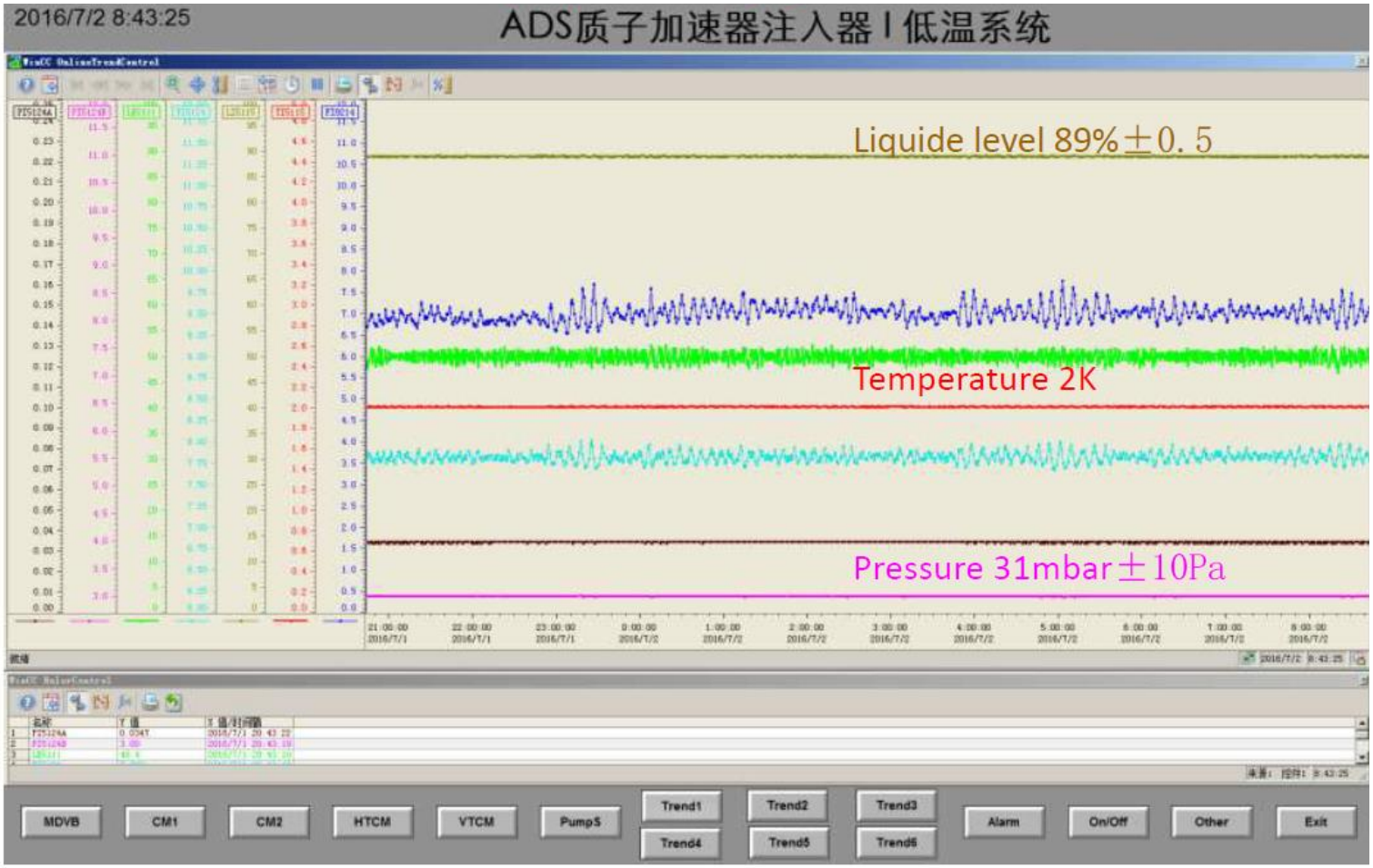

Milestones of ADS injector I cryogenic system

- Project application from 2010
- Preliminary design in 2011
- Construction from 2012
- Refrigerator commissioning in 2014
- Commissioning of whole cryogenic system in 2015
- Commissioning of ADS injector I in 2016

CSNS cryogenic system

China spallation neutron source (CSNS) Project

- CSNS construction site locates at Dongguan, Guangdong province.
- It is about 85 km from Guangzhou and about 125 km from Hong Kong.

Requirements to CSNS cryogenic system

- CSNS cryogenic system provides hydrogen to keep the two moderators at 20K.
- Dynamic heat load: DM: 400W (25% margin)
  CM: 300W (25% margin)

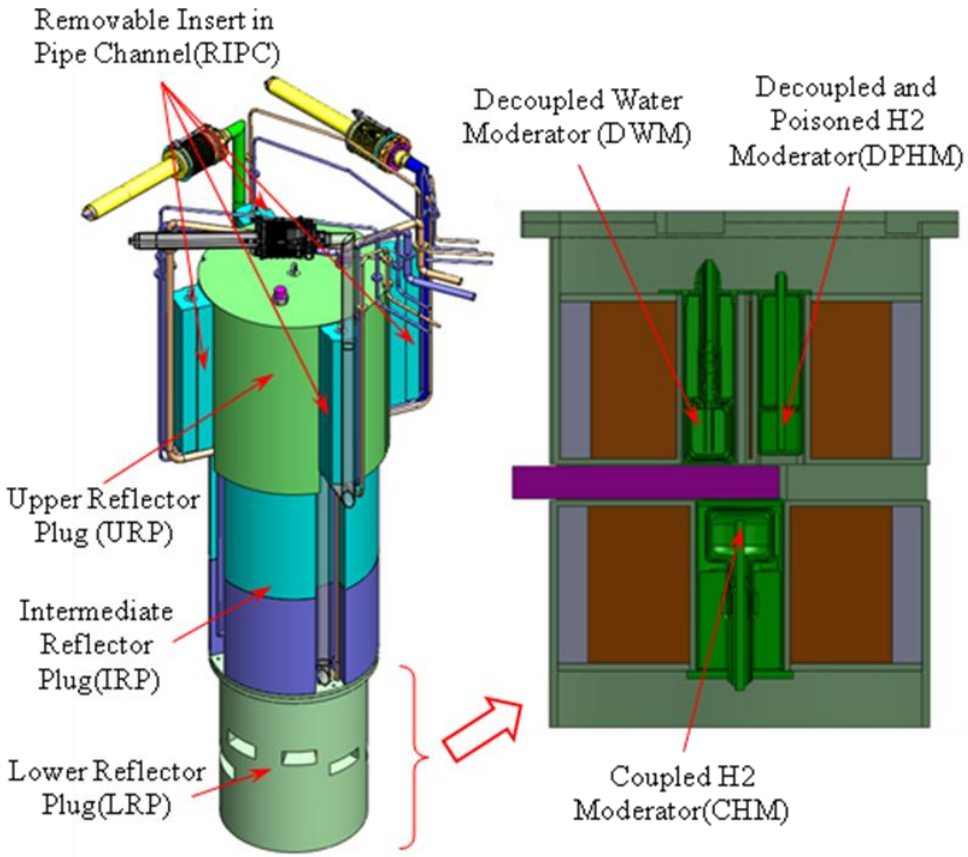

CSNS cryogenic system

CSNS Cryogenic system provides 20K supercritical hydrogen for neutron moderators, which includes helium refrigerator and hydrogen circulation system. The total hydrogen volume in hydrogen circulation is about 140 liters.

Design parameters of CSNS cryogenic system

Helium refrigerator	Flow rate	<110g/s	Hydrogen circulation system	Circulation temp.	18-21.8K
	Inlet temp.	>13.5K		Circulation pressure	1.5±0.1MPa
	Outlet temp.	<20.8K		Design pressure	2.5MPa
	Discharge pressure	<1.5MPa		Static heat load	800W
	Cooling power	2200W@20K		Dynamic heat load	700W

Flow chart of CSNS cryogenic system

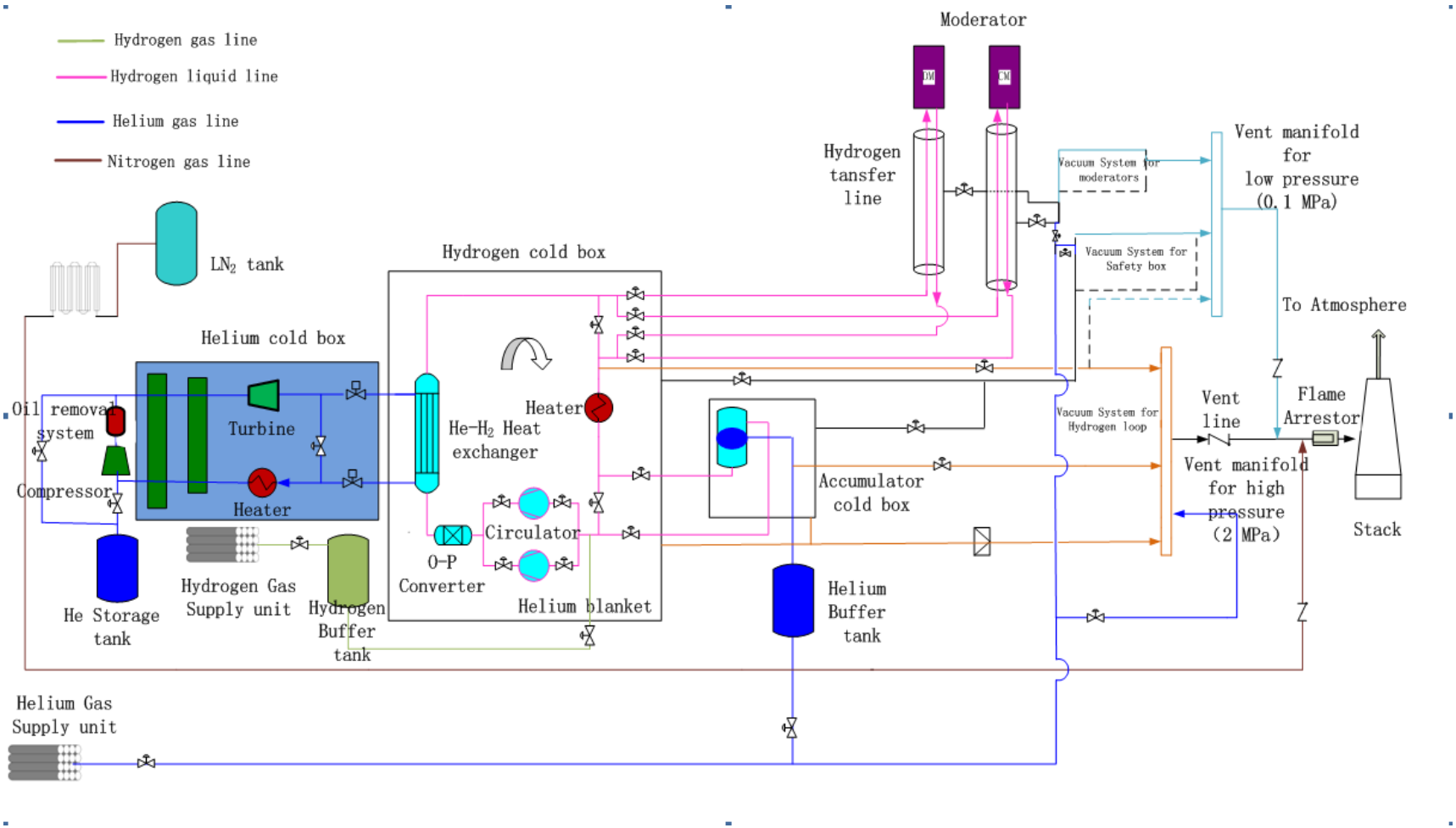

Layout of CSNS cryogenic system

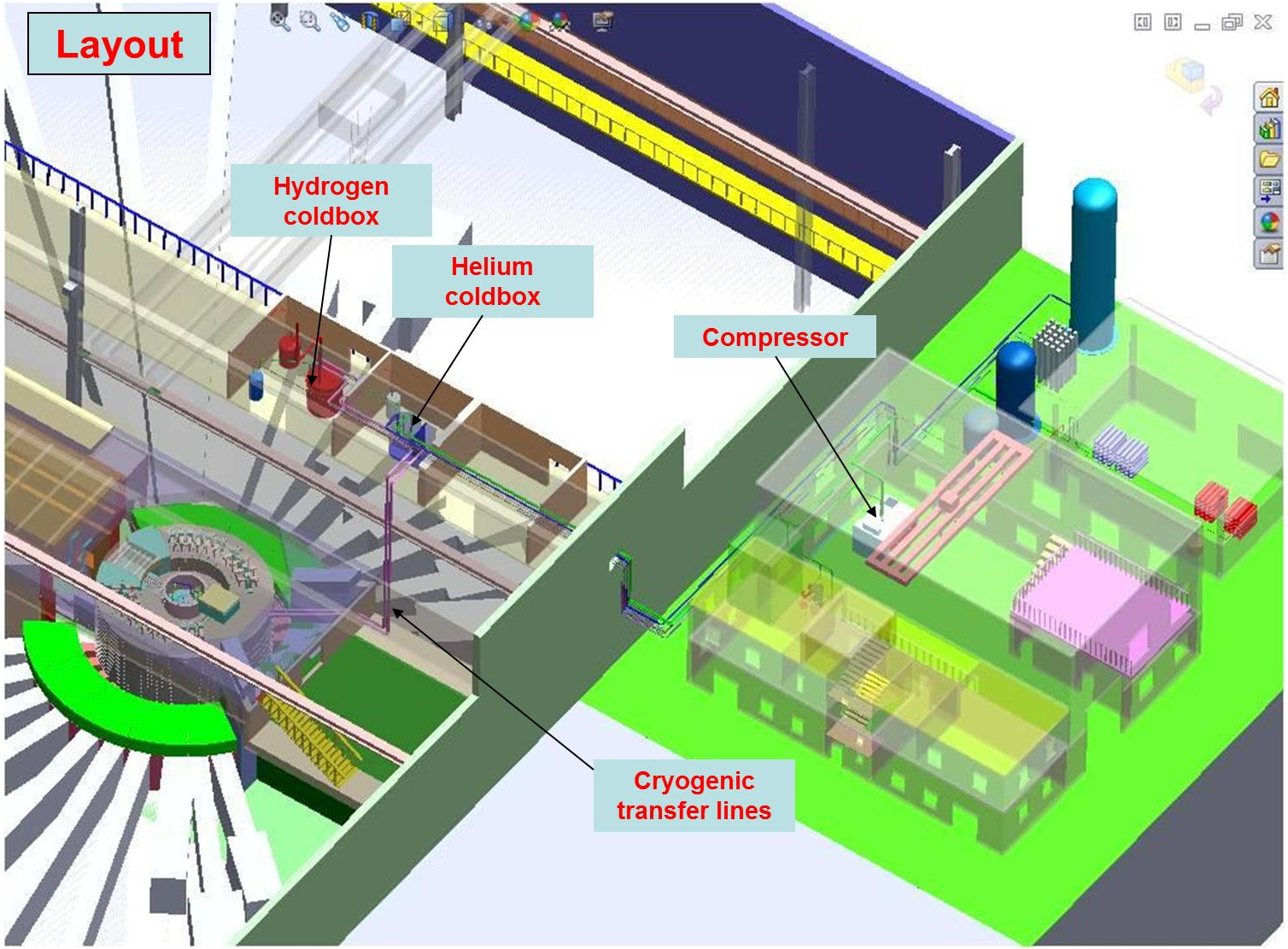

Milestone of CSNS cryogenic system

- October 20th, 2011, start construction of CSNS.
- December 5th, 2012, sign contract for helium refrigerator.
- November 18th, 2015, performance test of hydrogen cold box with 80K helium gas.
- August 5th, 2016, tested refrigeration power is 2300W@20K, reached the acceptance target.
- January 8th, 2017, start commissioning of CSNS cryogenic system.
- April 12th, 2017, successful cooling down with 20 K helium gas.
- May 5th, 2017, successful cooling down with 20 K hydrogen gas.
- June 21st, 2017, joint commissioning with moderators.
- December 11th, 2017, cryogenic system start operation till now.
- February 14th, 2018, national test of cryogenic system

PAPS and HEPS cryogenic system

PAPS and HEPS Projects

- **Platform of Advanced Photon Source Technology R&D (PAPS) was officially launched in Feb. 2017. The total project investment is 0.5 billion RMB.**
- **The goal of the PAPS project is to provide a good foundation and condition for R&D, engineering testing and verification for the high energy phone source (HEPS) project to be completed on schedule and to achieve the expected design target.**
- **The other goal of the PAPS project is able to produce and test 200 SC cavities and 20 EXFEL-like cryomodules every year.**
- **The energy of the HEPS storage ring is 6 GeV, the emittance is less than 0.06 nm ·Rad, and the capacity of the high performance beam-line station is not less than 90.**
- **Total HEPS project investment is 4.7 billion. The kick off of project is scheduled in December, 2018.**

HEPS-High Energy Photon Source

- HEPS will be constructed from December, 2018 to June, 2025.

Construction site

- Huairou district of Beijing
- About 60Km from IHEP

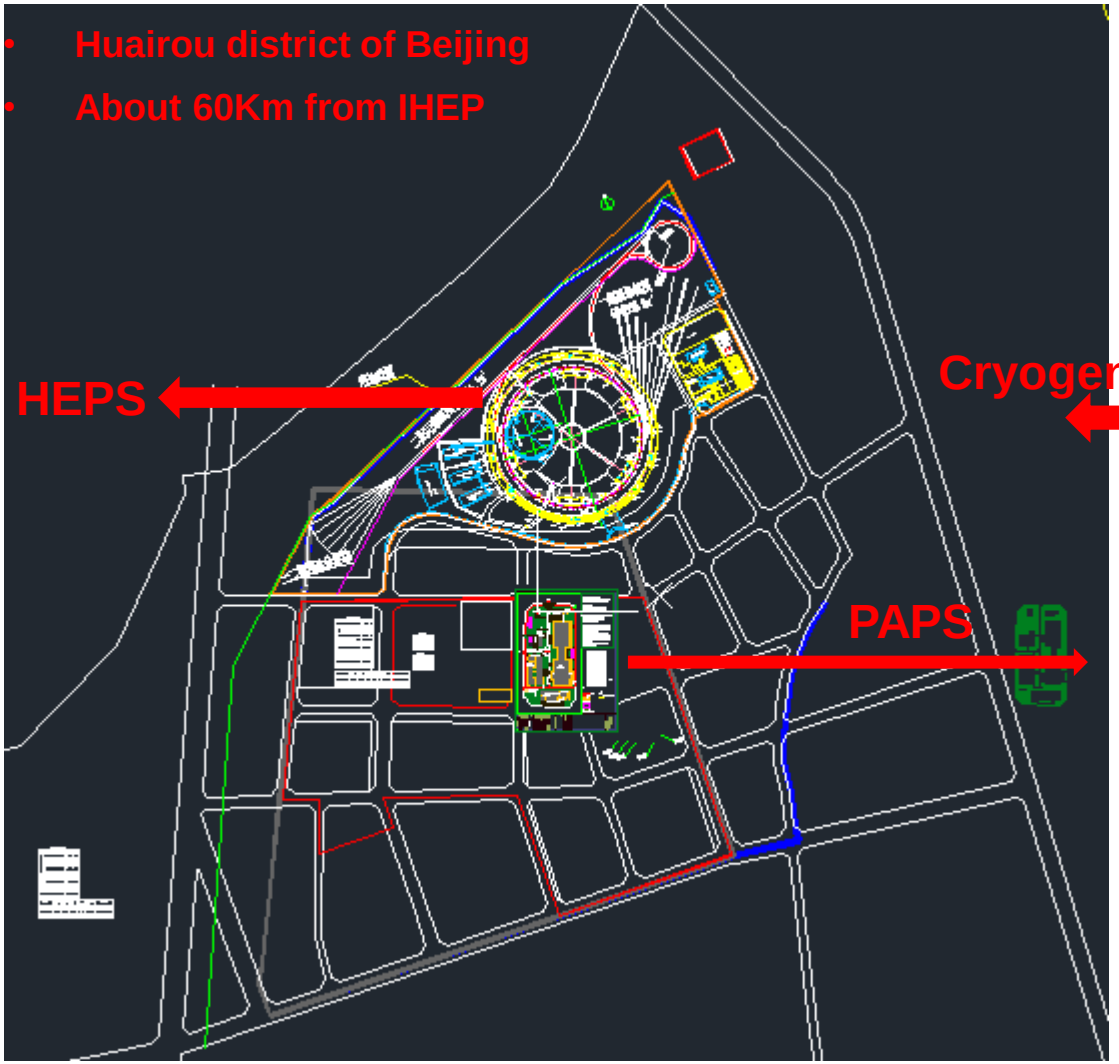

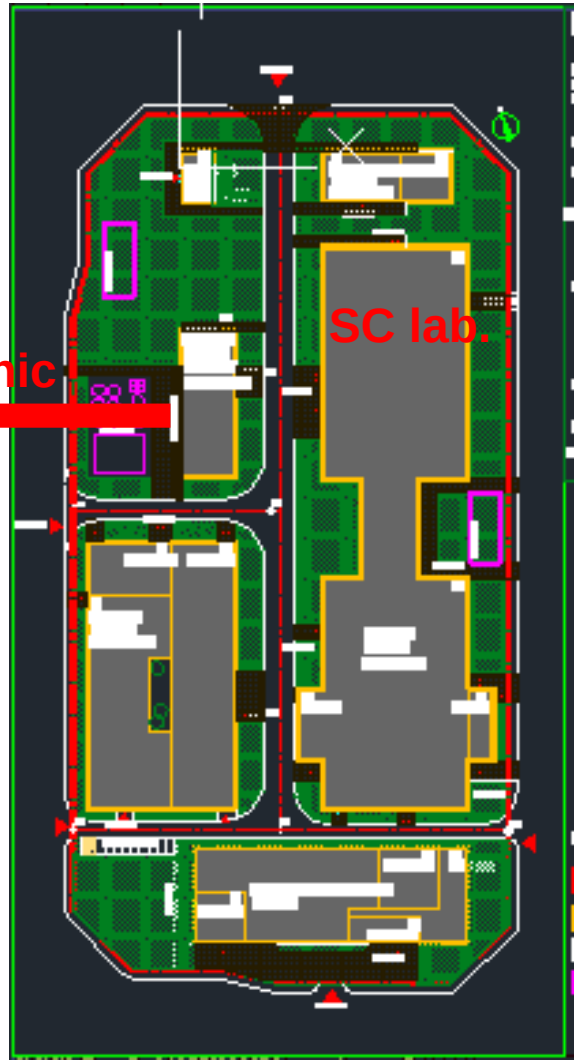

Construction goals of PAPS cryogenic system

- **Construct a 2.5KW@4.5K or 300W@2K cryogenic system with three vertical test stand, two horizontal test stand and a beam test stand of superconducting cavity.**
- **Construct a impure helium recovery and purification system with the capacity of 210m3/h helium recovery and 100m3/h helium purification**
- **Support the performance test of various type of superconducting cavity.**

Flow chart of PAPS cryogenic system

- **Key equipment :**
  - Refrigerator/liquefier
  - Helium Storage
  - Transfer and distribution
  - 2K pump system
  - 2K JT heat exchanger
  - Vertical test dewar
  - Cryomodules
  - LN2 system
  - Recovery and purifaction system

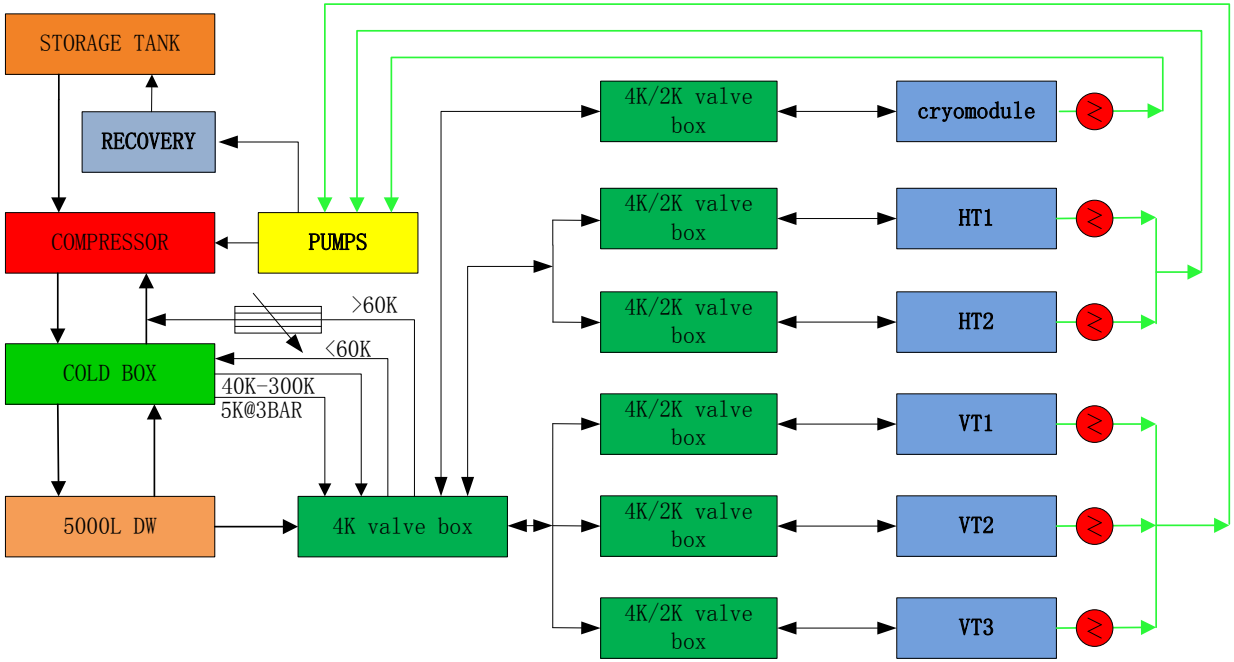

Scheme of production 2K helium

- **Reduce the saturated liquid helium pressure to 31 mbar or 16 mbar to produce 2K or 1.8 K superfluid helium**
- **The reflux cold helium subcools the saturated liquid helium through a 2K JT heat exchanger, and then the subcooled helium throttle to 2K liquid helium.**

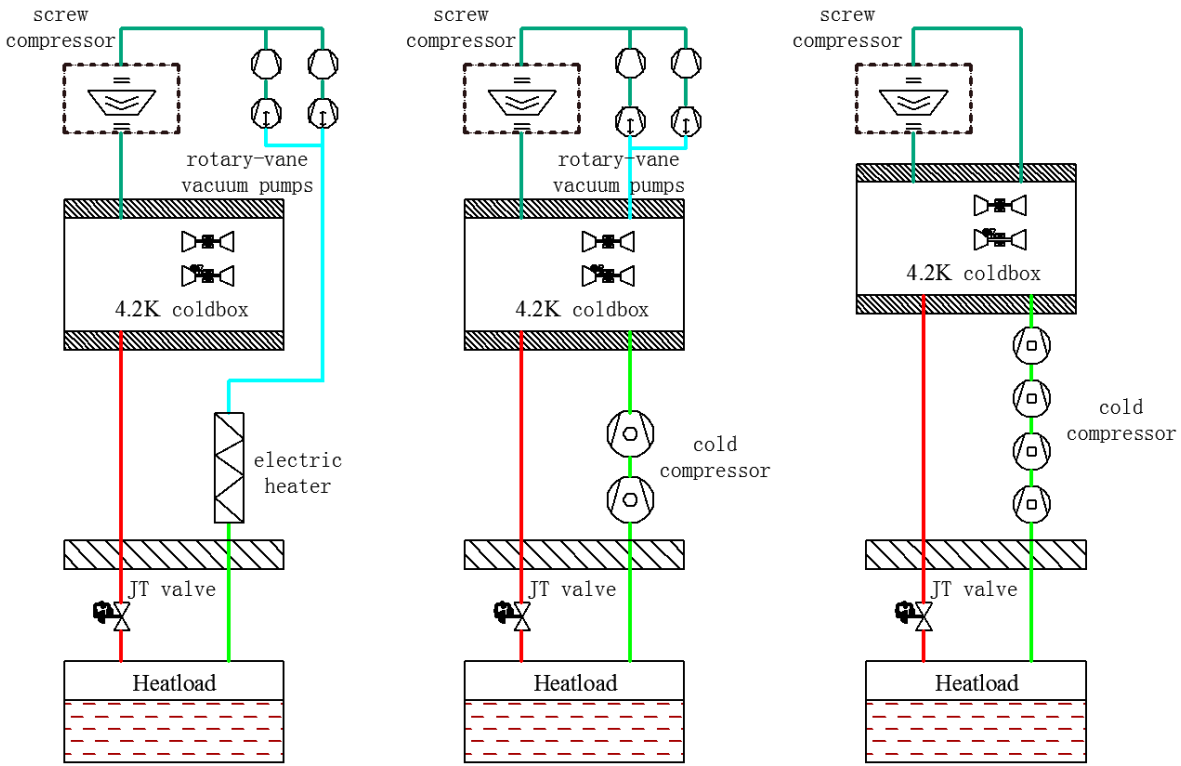

Warm pump | **Warm pump and cold compressor** | **Cold compressor**

Flow calculation

The flow distribution for three test stations were calculated with the software. Each station had a heat load of 100W@2K

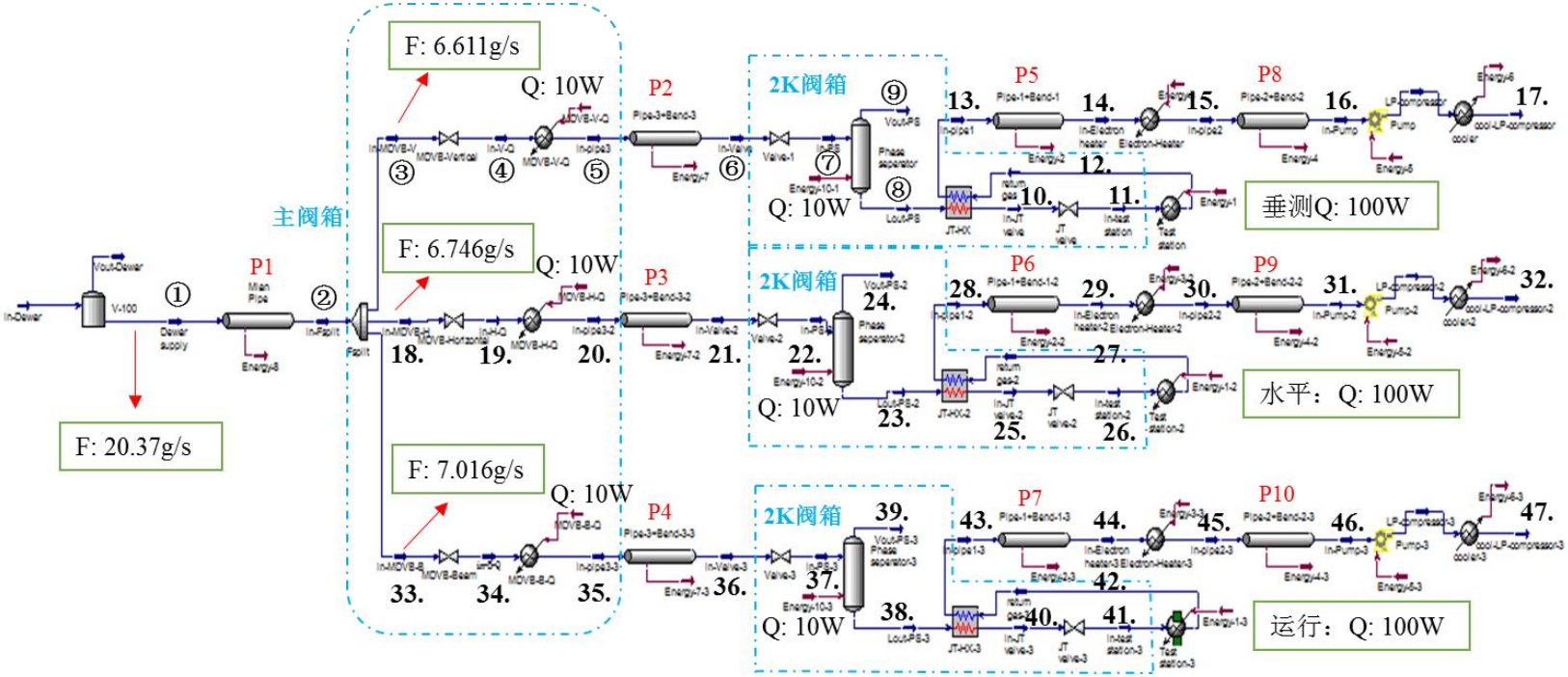

Vertical test station 100W@2K

Horizonal test station 100W@2K

Beam test station 100W@2K

Process flow diagram of cryoplant

Type: LR700

The cryoplant includes:

- Helium compression system
- Oil removal system
- Gas management system
- Coldbox system
- Liquid helium storage dewar

- **Ports for cold helium shall be provided as follows**
  - LHe/GHe to dewar
  - 5K cold GHe return
  - 5K~ 8K shield GHe
  - 40K~ 80K shield GHe
  - 80K shield SHe return
  - cool-down GHe supply 300K to 40K
  - cool-down GHe return with valves at 3 different temperature levels

- **Expected shield loads**
  - 5K shield: 500 W
  - 40K shield: 1000 W

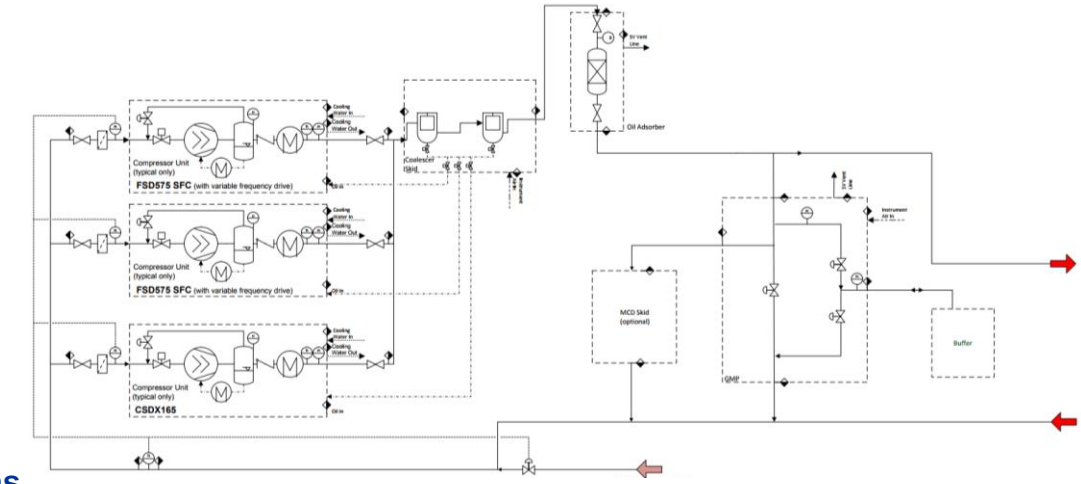

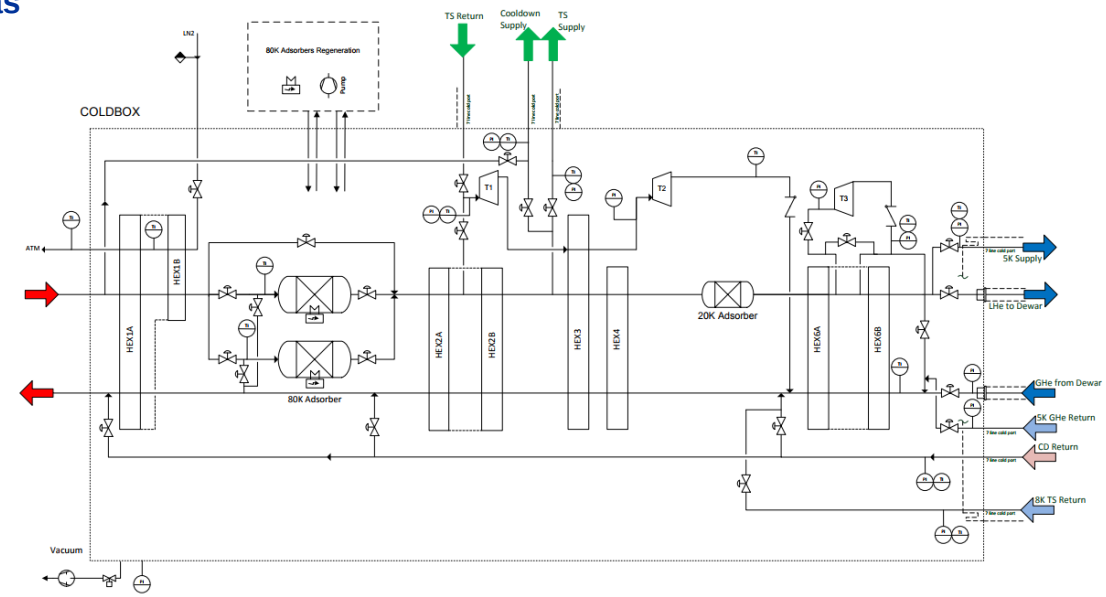

PAPS cryoplant from LINDE (LR700)

Coldbox main components：

- LR700 Heat exchanger
- 3 Turbines (TED22 & TED32)
- Cryogenic Valves
- 20K Adsorber
- 2x 80K Adsorber with Bypass
- Multi Transfer line (7-Lines) connetion inlc. Vacuum sleeve
- Testcap incl. Heater
- 1x Single Line Supply Coupling to Dewar
- 1x Single Line Return Coupling from Dewar
- 1x Coupling LN2 inlet
- 1x Vacuum Pump System (Turbo & Rough)
- Automatic 80K Adsorberregenation Skit
- Warm Panel
- 1x Control cabinet (TB1)

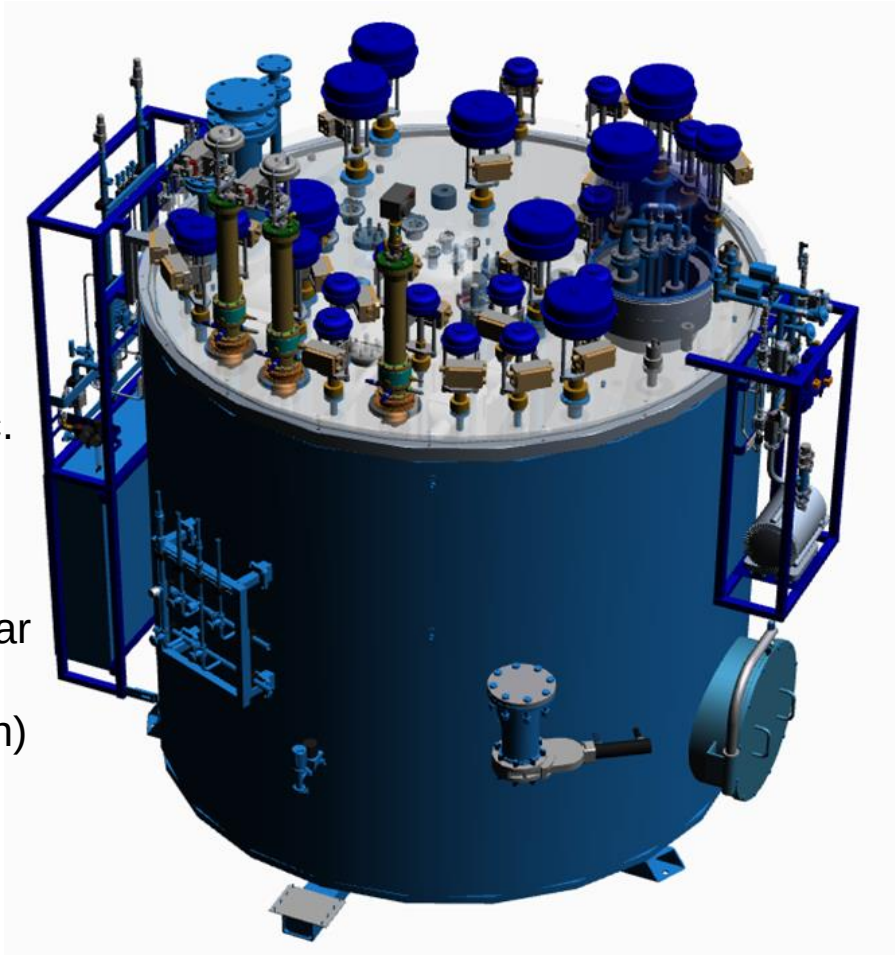

Plant Performance

BEIJING-IHEP-16: LR700

Performance	Guaranteed Values	Expected Values
Refrigeration capacity with LN2	≥ 2500W@4.5K	≥ 2625W@4.5K
Liquefaction rate with LN2	≥ 800L/h	≥ 840L/h
Refrigeration & Liquefaction With LN2	≥ 500W@4.5K&650L/h	≥ 525W@4.5K&684L/h
Refrigeration Without LN2		≥ 2310W@4.5K
Liquefaction Without LN2		≥ 256L/h
Refrigeration & Liquefaction Without LN2		≥ 905W@4.5K&290L/h

2K pumping system

- The vertical test station (three Dewars), the horizontal test station (two cryostats), and the beam test station (two cryostats). The heat load of each station at 2 K is 100W and the lowest temperature needed will be below 1.4 K.
- Vacuum pumps work together with electric heater.
- The maximum pumping speed of each station is not less than 6400 m^3/h, when helium pressure is 30 mbar and temperature 300 K. The lowest pressure limit of each vacuum pumps set is less than 2.5mbar.
- The refrigeration capacity at 2K is about 120W. And the rest capacity at 1.4K is 10W.

Capacity at different temperature

Temperature（K）	Saturation pressure（Pa）	Refrigeration capacity（W）	Mass flow（g/s）	Volume flow（m^3/s）	Remarks
2	3129	120	8.89	6400	Continuous liquid helium injection
1.8	1638	63	4.63	6400	Continuous liquid helium injection
1.6	746	28	2.14	6400	Continuous liquid helium injection
1.4	282	10	0.8	6400	Continuous liquid helium injection

2K pumping system

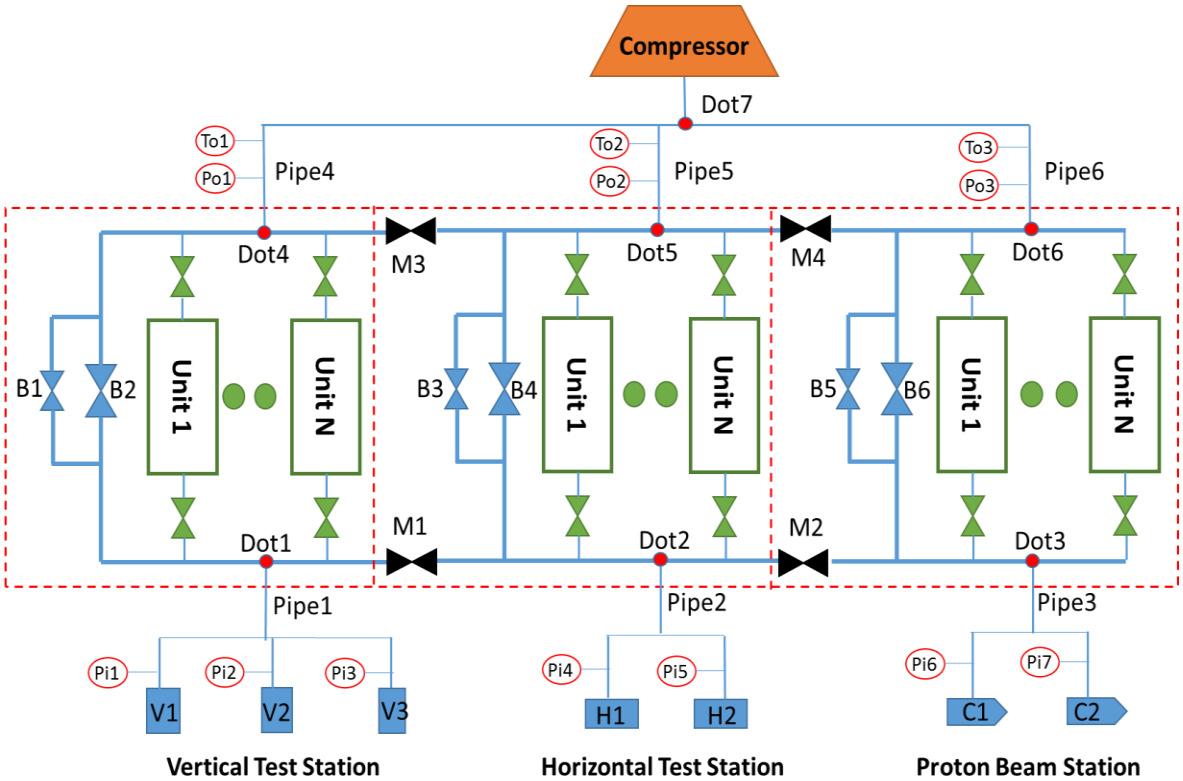

Function diagram

Main parameters

Helium tank pressure	3129 Pa
Pressure stability	+/-10 Pa
Max mass flow	26.7 g/s
Total pumps system capacity	19200 m^3/h （300K,30mbar）
Pumps station inlet temperature	300K
Pumps station outlet pressure	1.2 Bar
Noise level	<80 dB@1m
Leakage rate	1E-6 $Pa \cdot m^3/s$
Vibration size	<5mm/s

- Separate control systems will be set up for each station. The control system is divided into manual and automatic modes, including two parts: local and remote.
- When the pressure of station reach to 31mbar, the pressure fluctuation will be controlled within ± 10Pa .

Layout of 2K pumping station

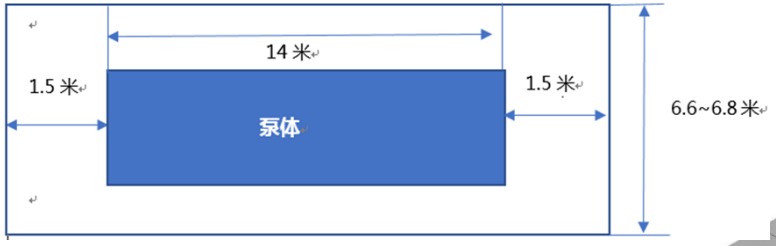

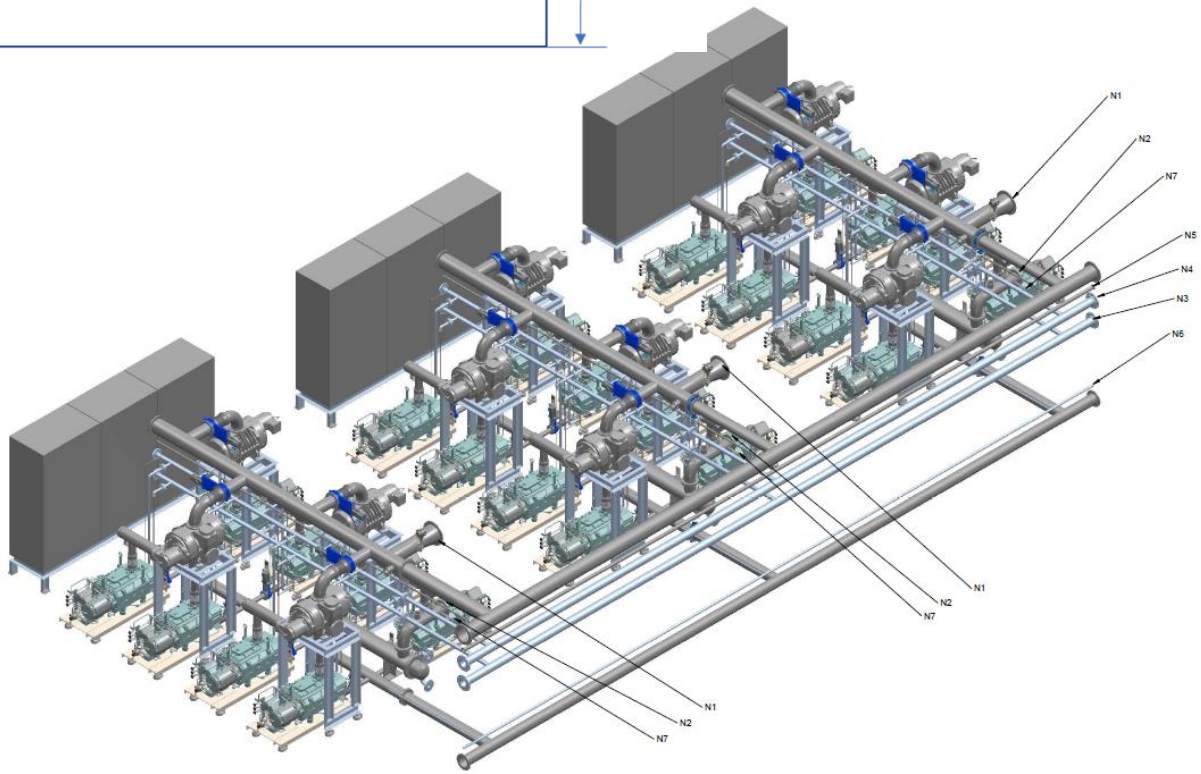

BNV 2000 A 1200 (He)

Nominal Speed	2435 m3/h Air
Speed 30 hPa	1900 m3/h He 60 Hz
Speed 30 hPa	1612 m3/h He 50 Hz
Motor Power	37.5 kW

1xModule Unit

4x BNV 2000 A 1200 (He)

Nominal Speed	9696m3/h Air
Speed 30 hPa	7600 m3/h He 60 Hz
Speed 30 hPa	6448 m3/h He 50 Hz
Motor Power	150 kW

Layout of PAPS Cryogenic hall

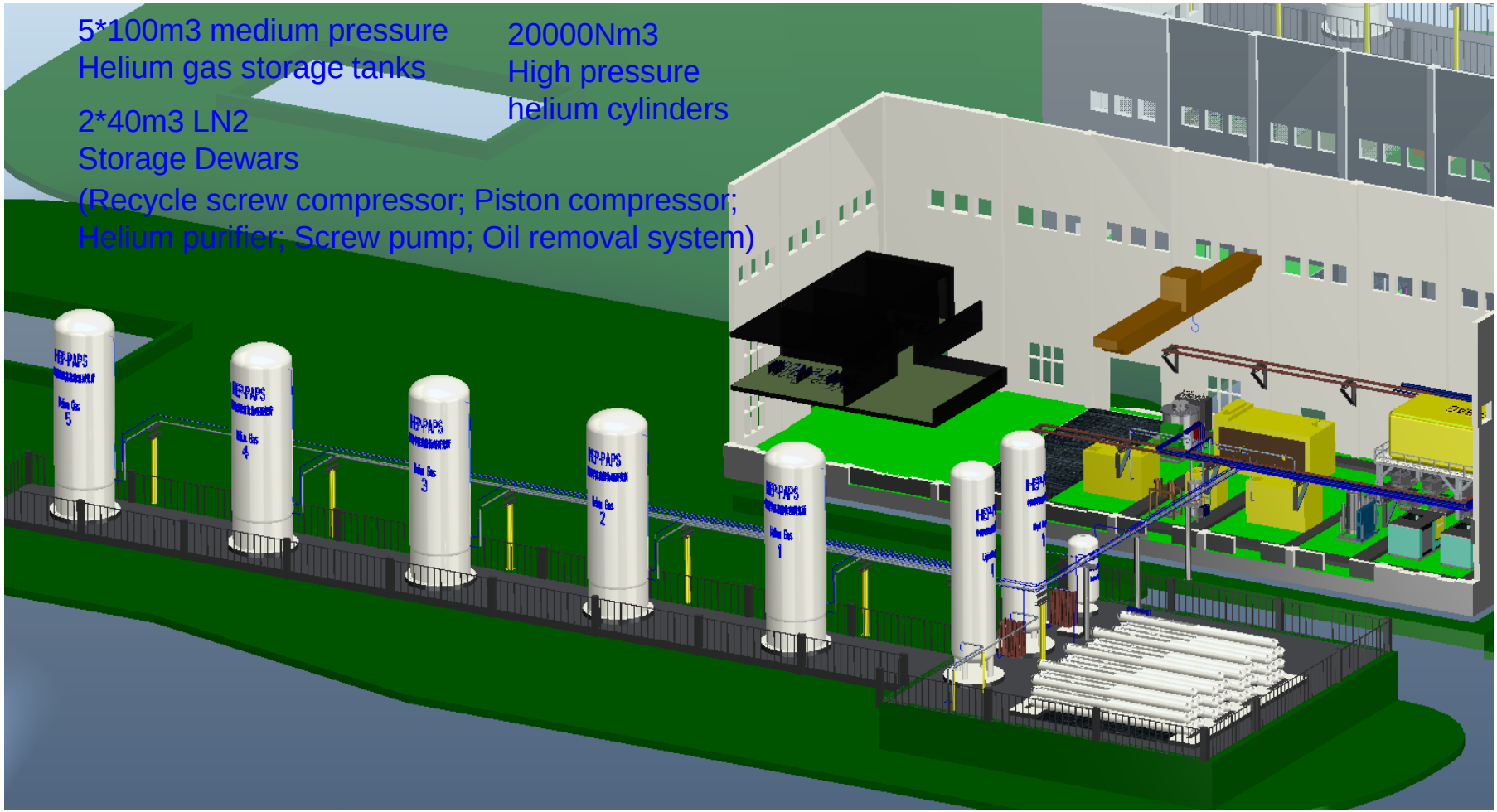

Layout of PAPS SC test stands

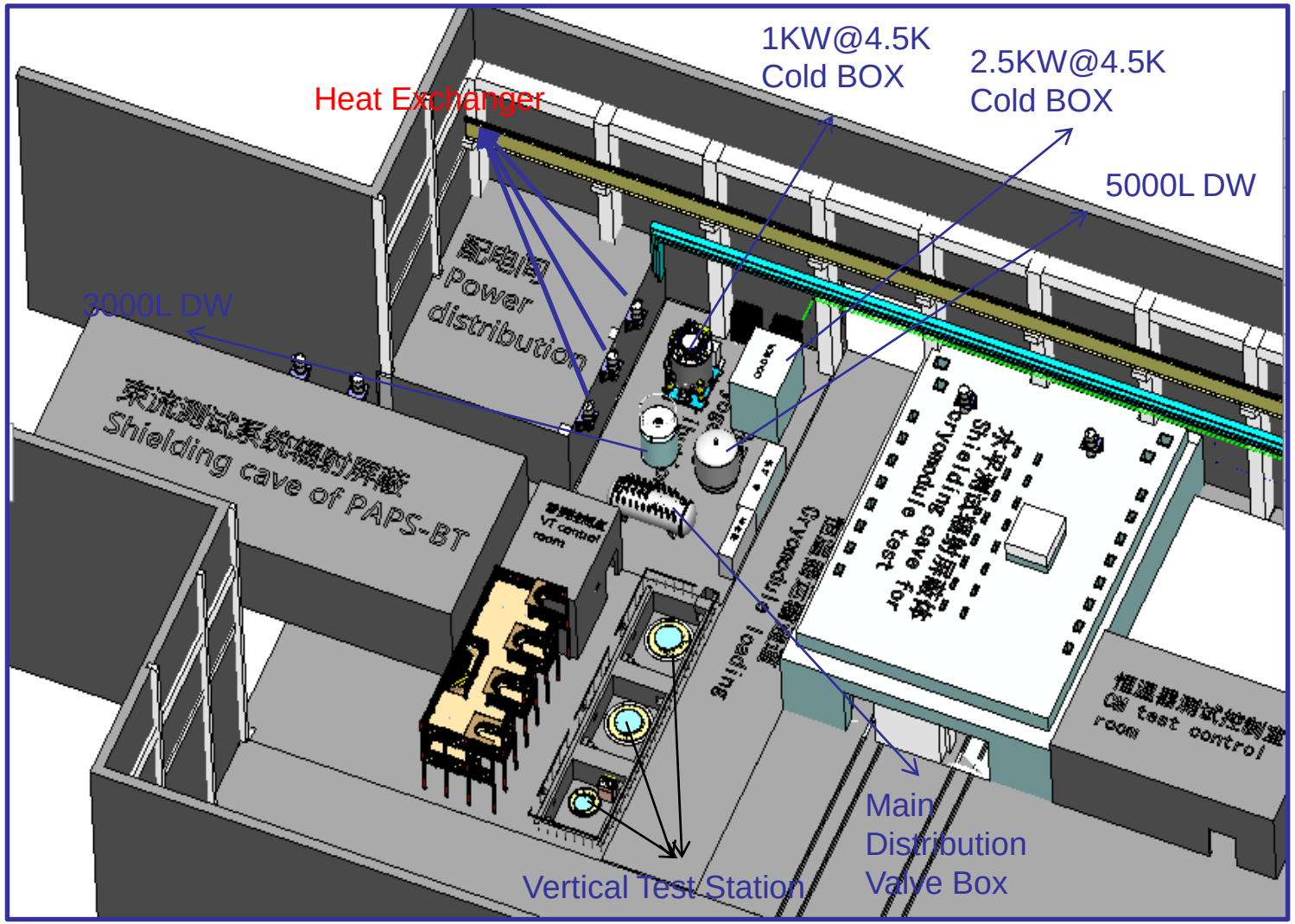

Progress of PAPS Civil work

The civil work will be finished in April, 2019. Then the equipment will be installed.

Design of 2K J-T heat exchanger

Fluid	Liquid helium	Gas helium
Inlet temperature（K）	4.45	2
Inlet pressure（Pa）	1.25E+05	3100
Outlet temperature（K）	2.2	3.36

Table 1 The designed working condition

Mass flow rate	m=2g/s	m=5g/s	m=10g/s
Axial length of coil finned tube (m)	0.52	0.603	0.691
Axial length of heat exchanger (m)	0.72	0.803	0.891
Pressure drop for the shell side (Pa)	6.1	30.6	70.2
Pressure drop for the tube side (Pa)	36.2	242	388.9
Heat exchanger efficiency	91.8%	91.8%	91.8%

Table 2 The design results of J-T heat exchanger for m=2g/s，m=5g/s and m=10g/s

Fig.1 J-T heat exchanger

2K JT heat exchanger

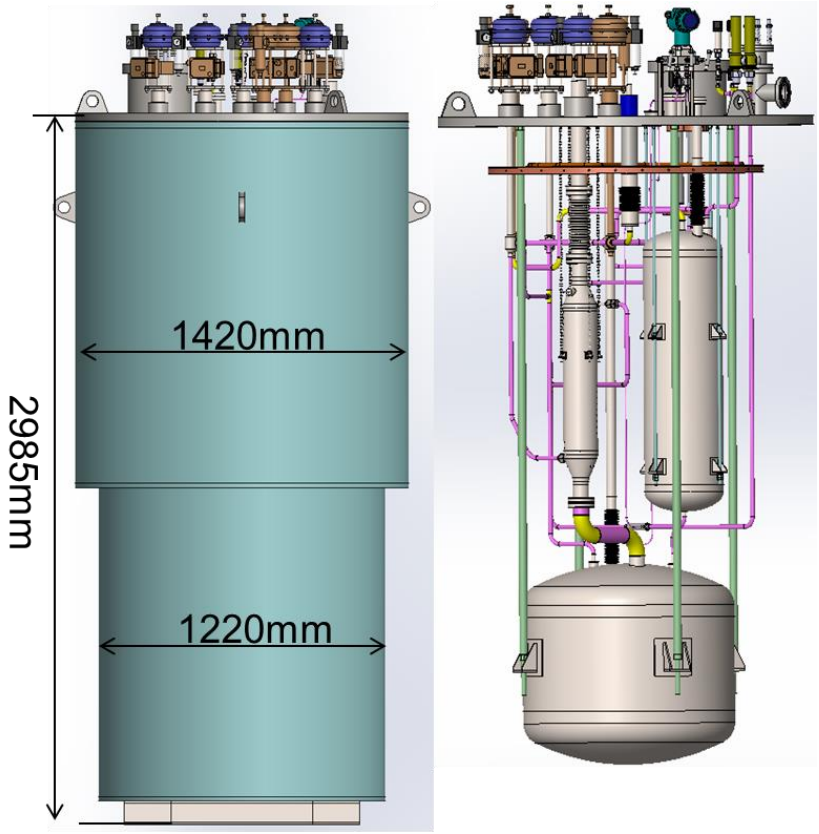

HEX Test Cryostat

Pmax	Pmin	Tmax	Tmin
1.25bara	3kPa	4.5K	2K

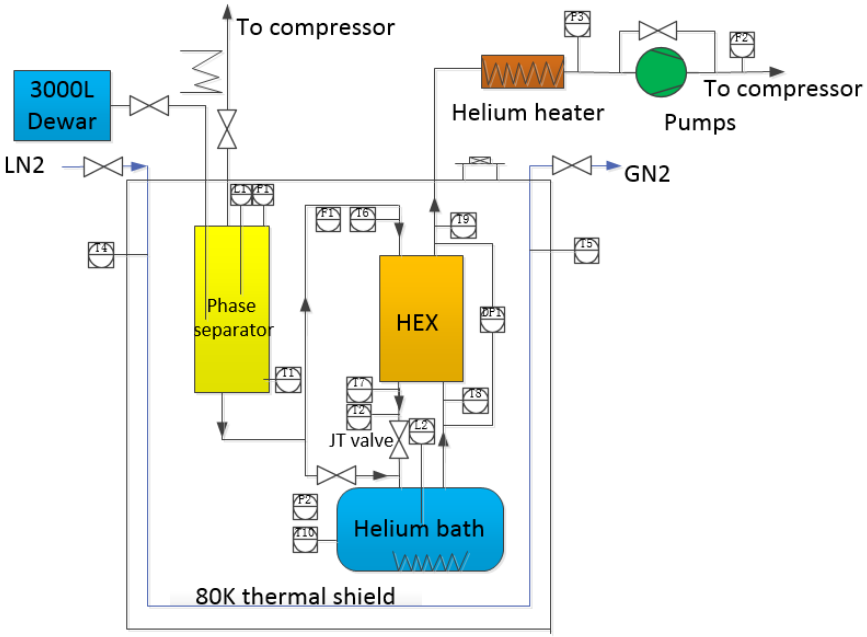

Cryostat for PAPS vertical test stand

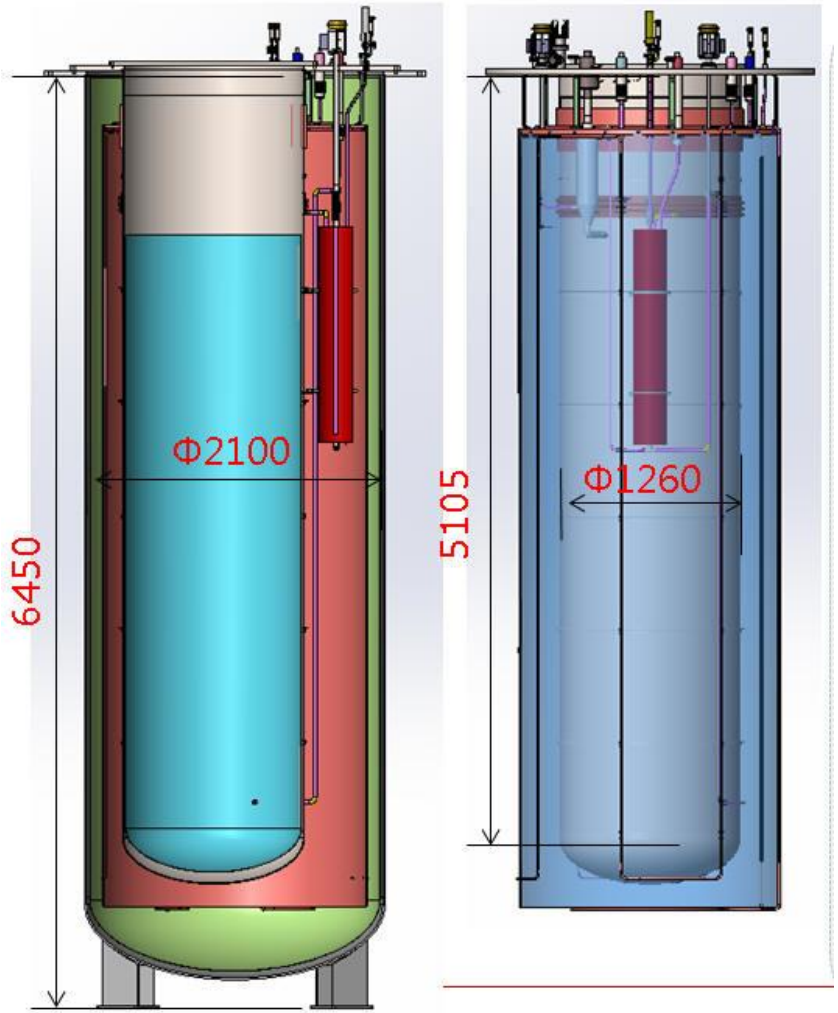

Main technical parameters：

- Working temperature：2K；
- Working pressure：
  -0.1MPa to 0.35MPa（inner vessel）
  -0.1MPa (outer vessel)
- Dimension：

Φ1250（inner diameter）×5360mm(height)
Φ1976（outer diameter）×5925mm(height)
Total height：6325mm

- Main components:
  Inner vessel
  80K shield
  Vacuum jacket
  Two layer magnetic shield

- Materials：inner vessel and cryogenic pipeline:SUS316L，outer vessel:SUS304.

PAPS Horizontal Test Cryomodule

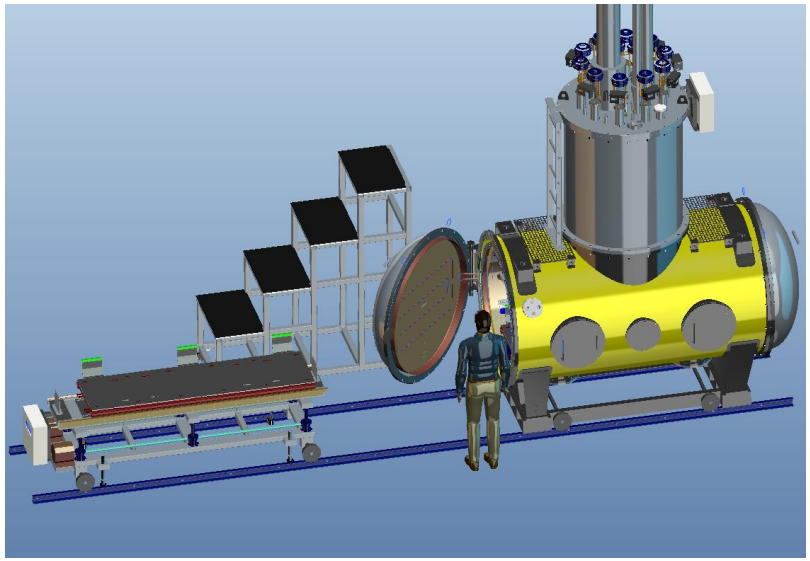

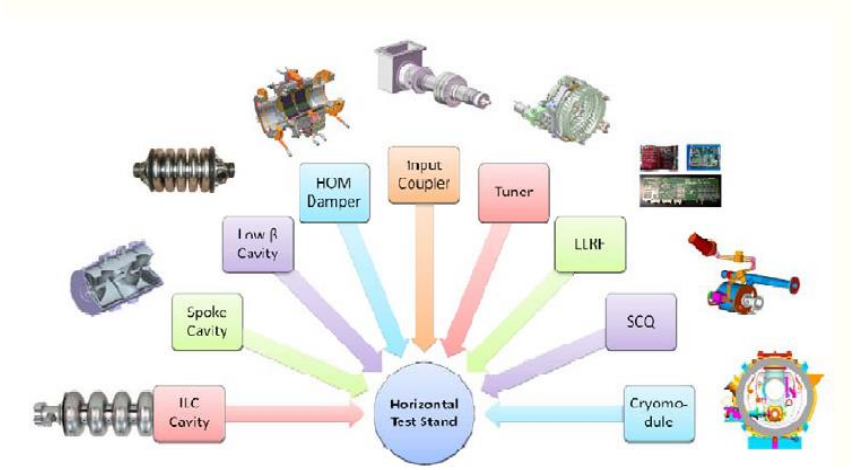

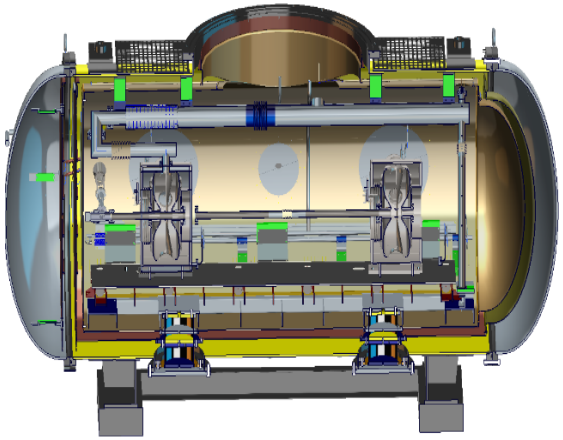

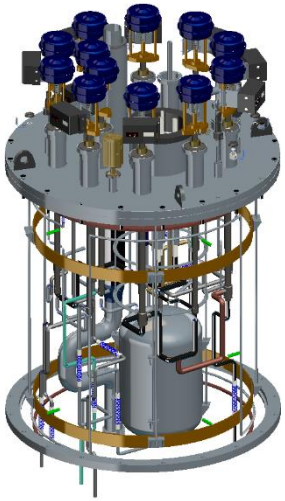

- **Length: 3800**
- **Height: 3200**
- **Diameter:1400**
- **Fast cooling down test**
- **Test two cavities at a time**
- **Test cavity performance at 2K**
- **Test and check key equipment of SC cavity such as tuner, power coupler,HOM coupler etc.**

650MHz cryomodule for beam test

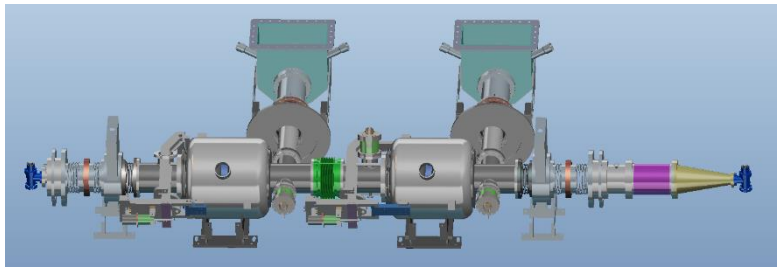

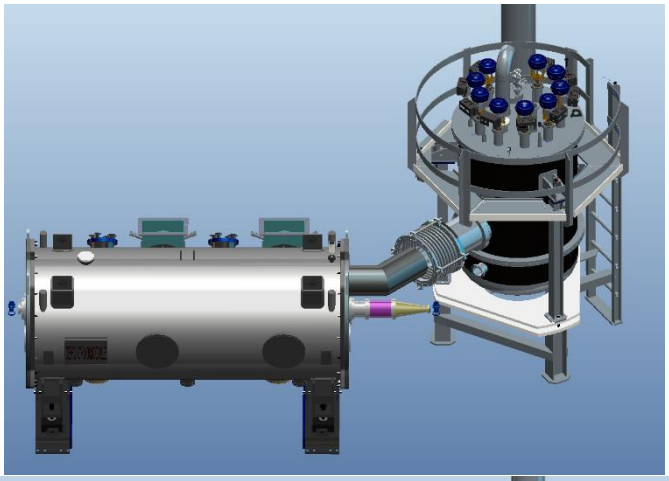

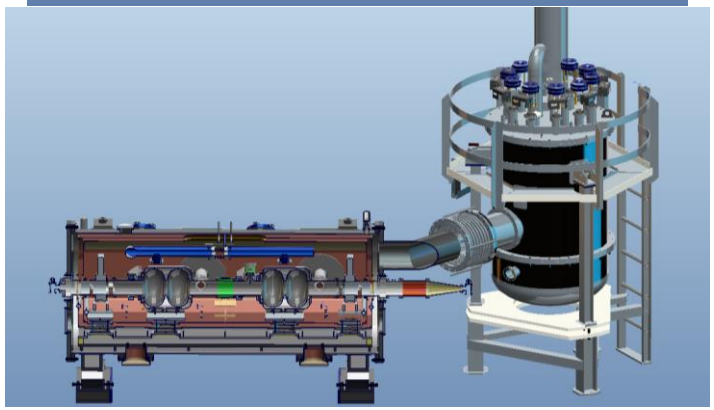

- Design for Beam test
- Two 2-cell 650 MHz superconducting cavities;
- Two high power couplers
- Two mechanical tuners
- Two HOM absorbers
- Fast cool-down is introduced

- Vacuum vessel
  - –Outer diameter:1324mm
  - – Length:3000mm
- Support post
  - –Supporting the all cold mass in the vacuum vessel
  - –Supporting Cavities： Diameter is 180mm
  - –Supporting RF-Gate Valve： Diameter is 150mm
  - –Number:2+2=4
  - –Material： FRP(G-10)
- Thermal shield
  - –Aluminum plate
  - – Two layer: 40K-70K , 5K-10K
- Strongback
  - –Stainless steel
  - –Room temperature

The helium recovery and purification system

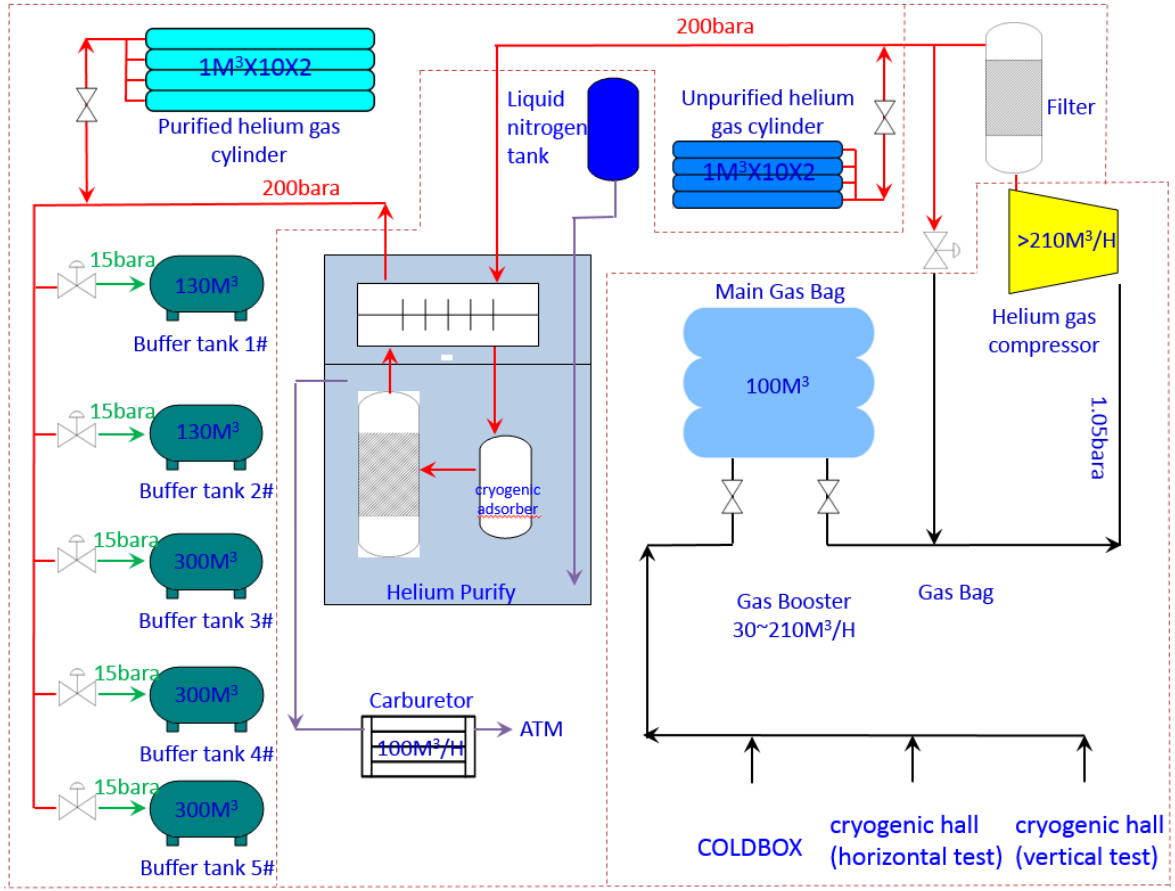

Main parameters

Storage capacity	≤20000NM3
Working pressure	≤200bara
Recovery efficiency	≤99.5%
Purification ability	≥105NM3/H
Recovery ability	≥210NM3/H
Gas helium purity	≥99.9995%
Operation	Automatic

- Working modes include recovery, purification and regeneration;
- All the processes can work manually and automatically.
- The regeneration of absorption cylinders is completed by heating and evacuation.

Current progress of PAPS cryogenic

- Completed the preliminary design of PAPS cryogenic system
- Organized the review of technical scheme of PAPS cryoplant
- Signed the contract of cryoplant
- Completed the preliminary layout of cryogenic system
- Completed the biddings for middle/high pressure storage tanks, LN2 storage tank, high pressure compressor, helium purifier and 2K pump system
- Completed the design and fabrication of vertical test cryostat, horizontal test cryomodule and test platform of J-T HEX
- The design of beam test cryomodule, main distribution valve box and cryogenic transfer-line are in progress.

PAPS Time schedule

- Feb. 2017 Project start
- Aug. 2017 Preliminary design
- Oct. 2018 Civil work
- Aug. 2017 Contract of cryoplant
- Jul. 2019 Pipe work
- Jul. 2019 Commissioning of recovery and purification system
- Aug. 2019 Commissioning of cryoplant
- Sept. 2019 Commissioning with Vertical/Horizontal/Beam test stand
- Dec. 2019 Cryogenic system operation
- Jun. 2020 Project finish

HEPS Cryogenic systems

- 4.5K Helium cryogenic system
  - Used to cool down five166.6MHz and two 499.8MHz superconducting cavities;
  - Cooling capacity ~2000 W@4.5K；
  - Auxiliary system, impure helium gas recovery and purification system.
- LN2 cryogenic system
  - Used to cool down CPMU and Cryostal-Monochromator, cryogenic devices of Beam line station …;
  - Cooling capacity ~46kW@80K.

General layout of HEPS

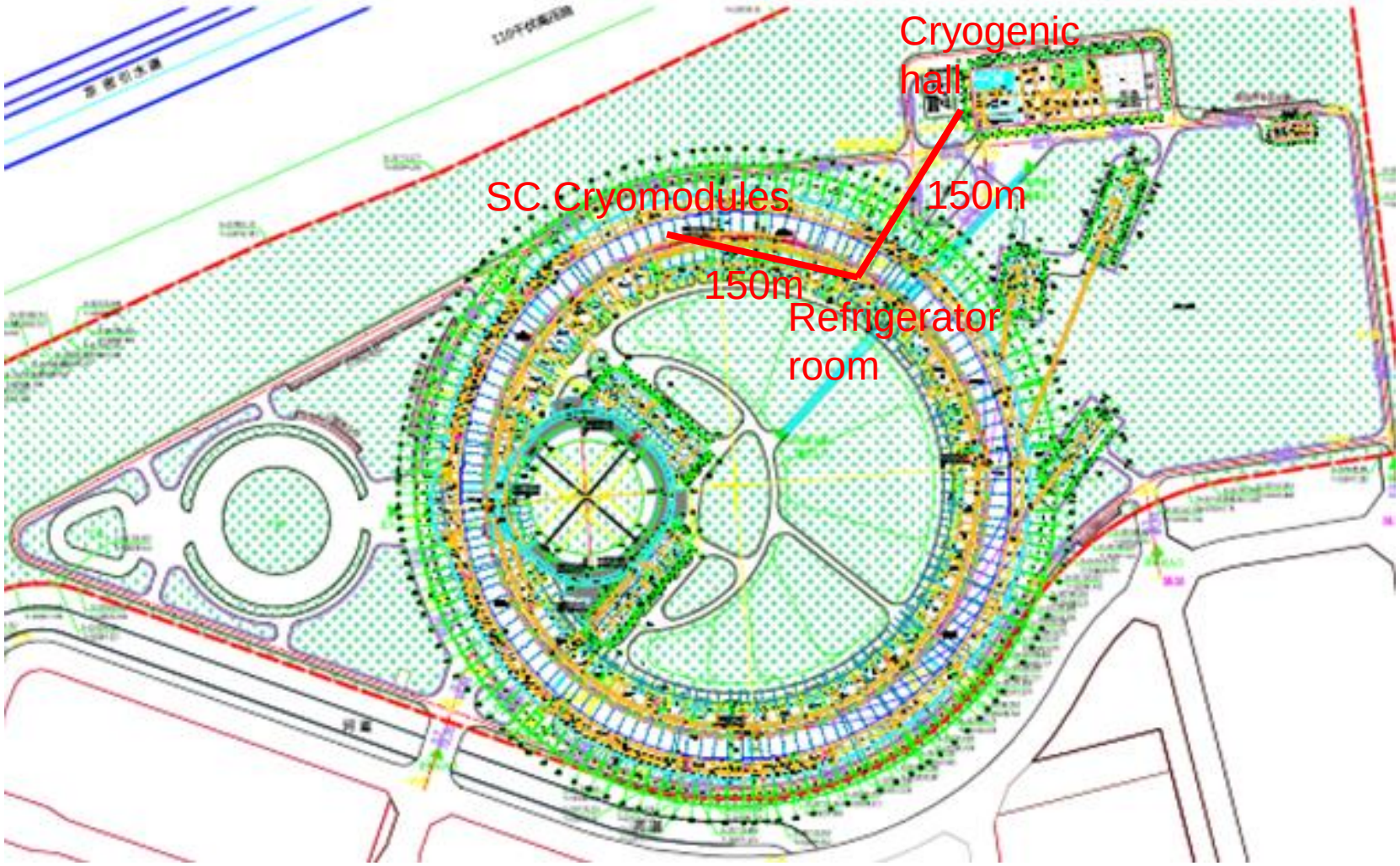

Diagram of HEPS cryogenics

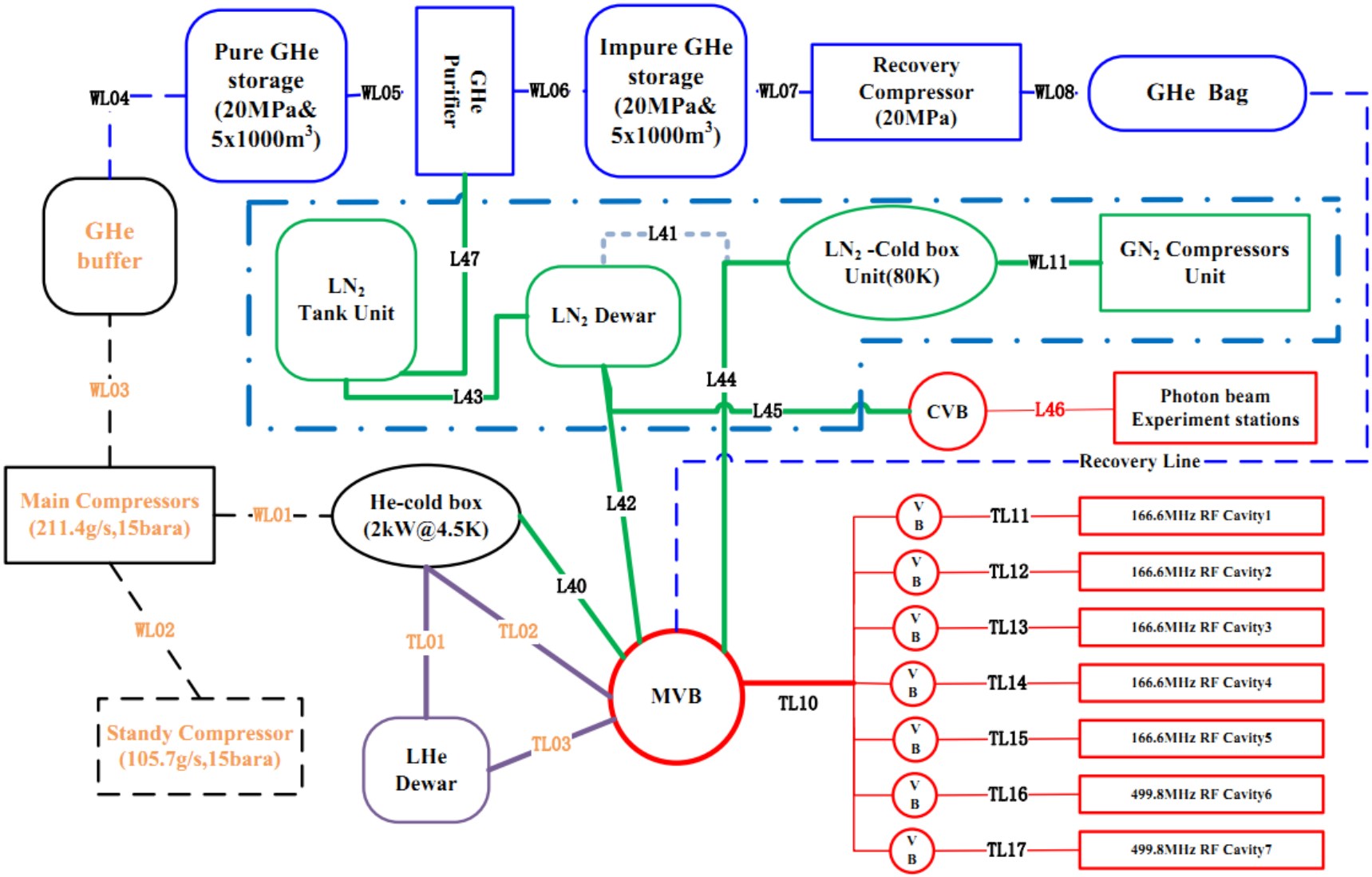

Simplified flow chart of He cryogenic system

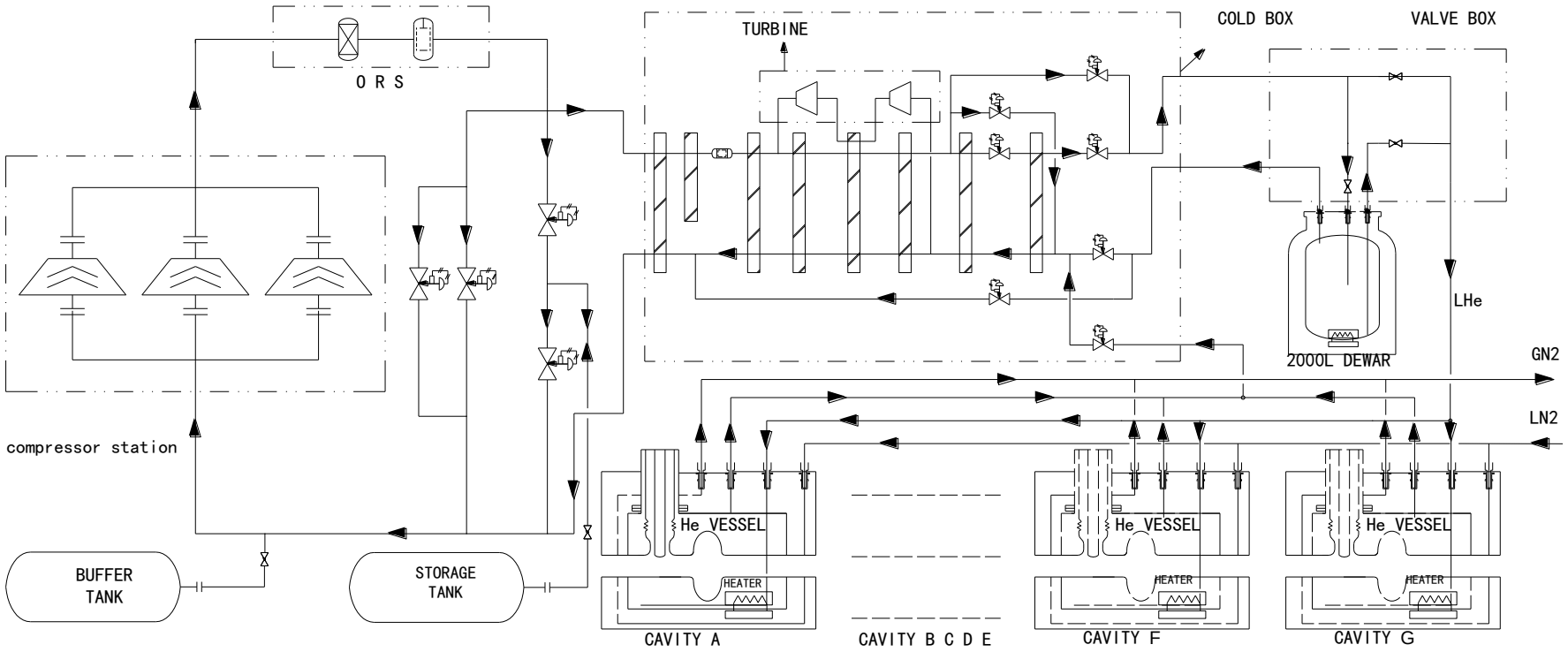

Layout of the Cryomodules

- 7 SC cryomodules
- Can be upgrade to 10 cryomodules in the future
- Multi-channel distribution transfer Line~200m

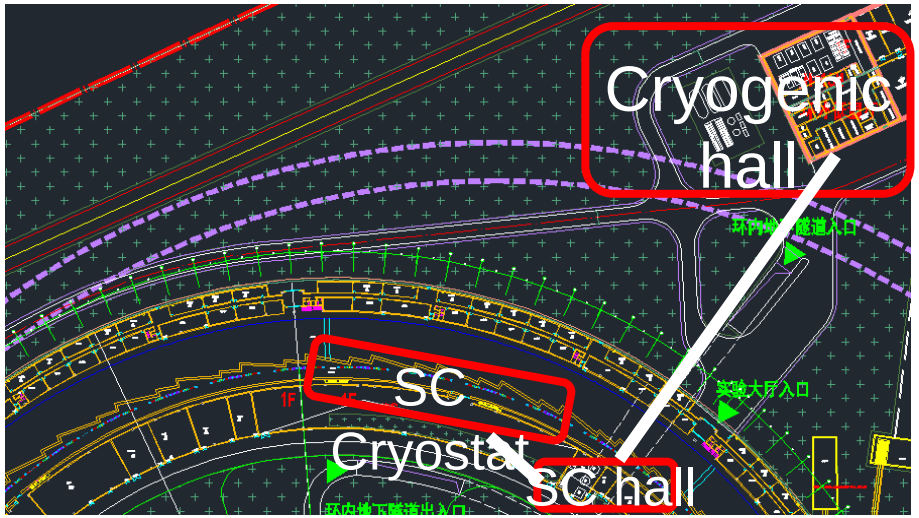

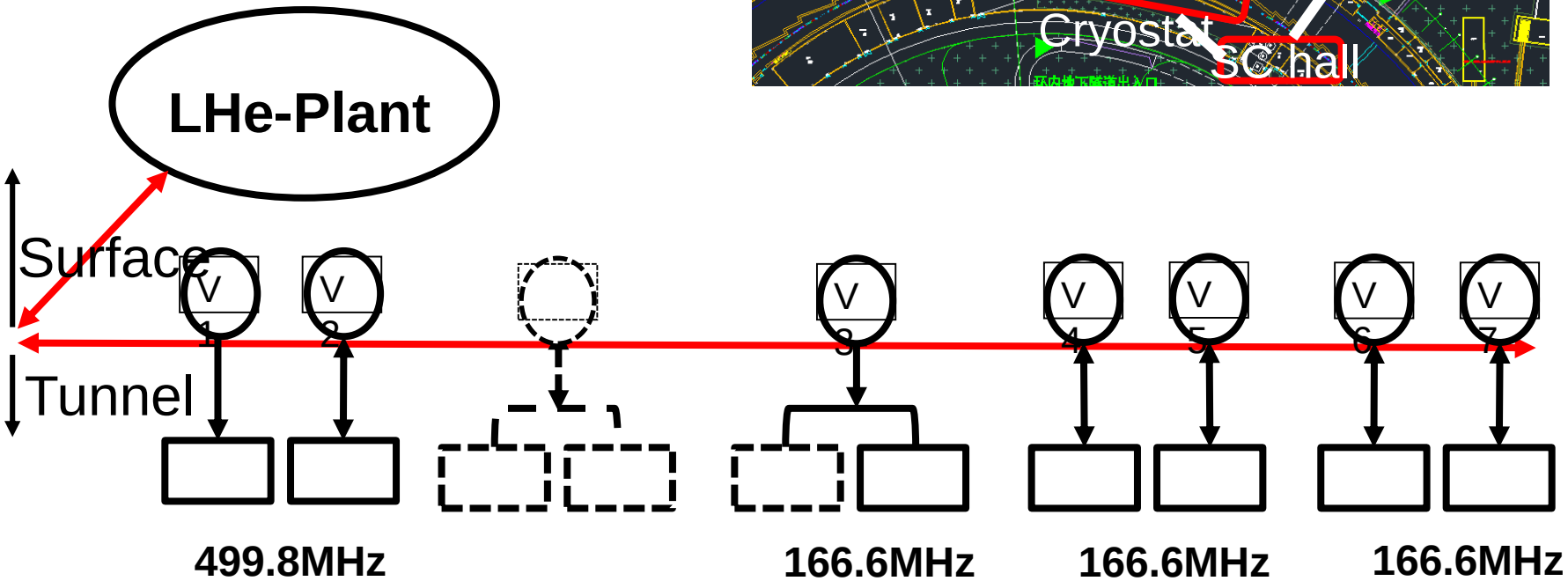

499.8 MHz Cryomodule

Name	Load		
499.8MHz Cryomodule	Static load（W）	2×40	80
	Dynamic load（W）	2×85	170

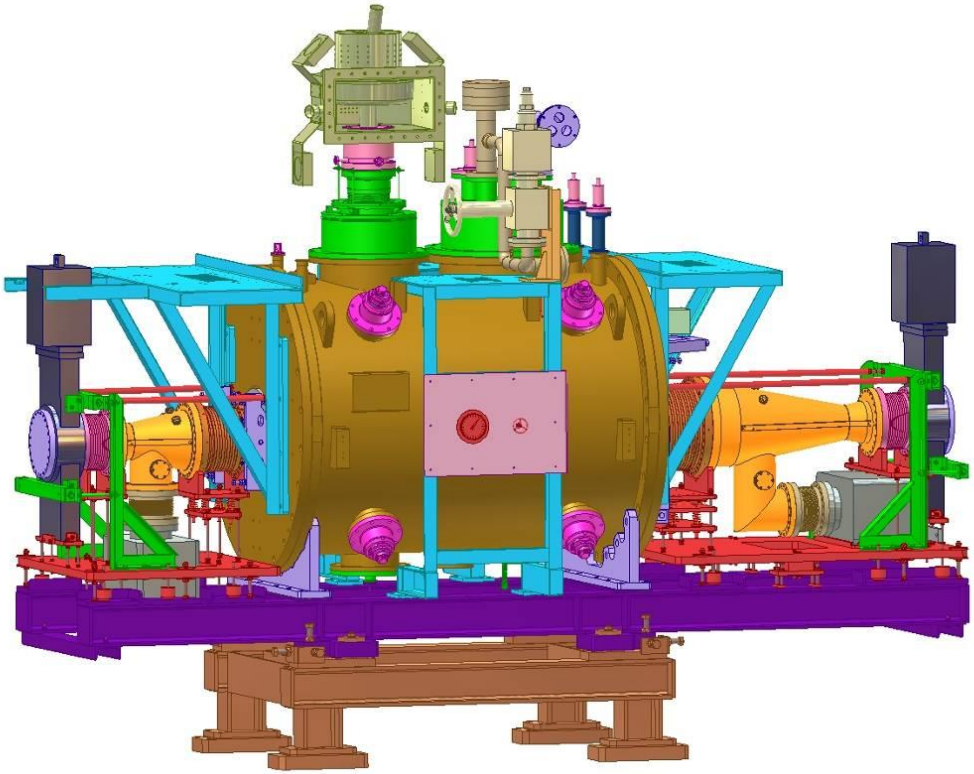

- This kind of cryomodule has been used in BEPC II more than 12 years;
- The spare cryomodule made by IHEP also has put into operation around 2 years;
- Relatively mature technology.

166.6 MHz Cryomodule

Name	Load		
166.6MHz Cryomodule	Static load（W）	5×50	250
	Dynamic load（W）	5×80	400

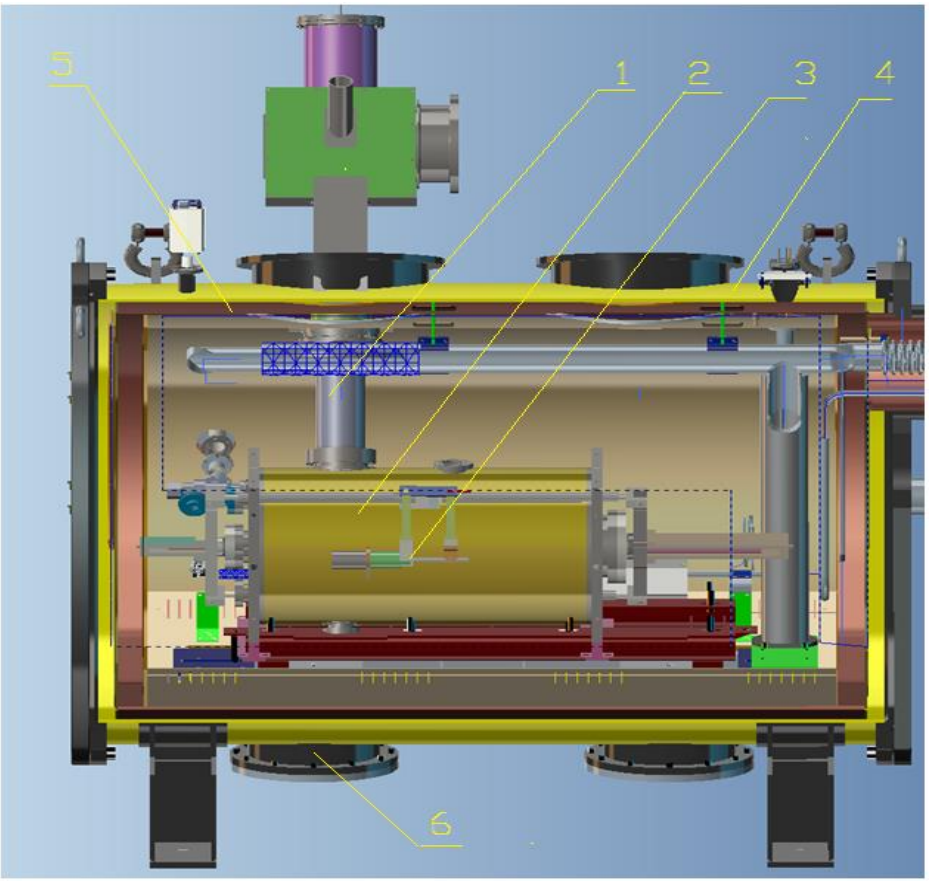

- Horizontal test is under going ;
- the design of the real cryomodule will be started after the horizontal test;
- Confirm the last design version of each components.

Heat loads of HEPS cryogenic system

No	Name	Heat load	Total	
1	499.8MHz SC Cryo-module	Static heat load（W）	2×40	80
		Dynamic heat load（W）	2×85	170
2	166.6MHz SC Cryo-module	Static heat load（W）	5×5	250
		Dynamic heat load（W）	5×80	400
3	Common Parts	Main valve box	1×50	50
		Distribution valve box（W）	15×7	105
		Cryogenic transfer Line（W）	200×0.5	100
		Helium Dewar and heater（W）	1	80
4	Margin 30%（W）			371
5	Total heat loads（W）		1606	
6	Total heat loads after upgrade（W）		2100	

Helium Refrigerator

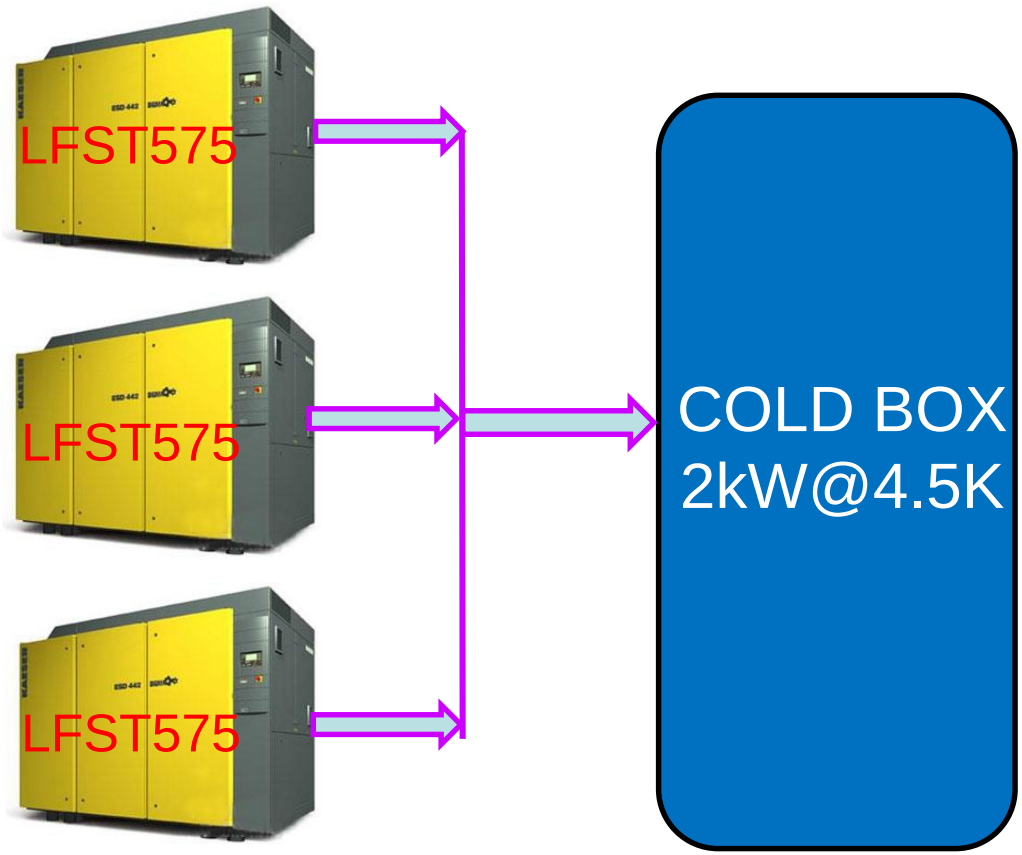

- helium refrigerator is one of the most key equipment of the cryogenic system;
- Two LFST575 type compressors with frequency converter can make 2kW@4.5 cooling capacity ;
- The cooling capacity can be adjusted between 1.5 and 2 kW by the frequency converter;
- Compressor is the large power equipment, two compressors online operation and one compressor as spare make the whole refrigerator running with higher efficiency.

Core：Operation with low failure rate

He Recovery & Purification System

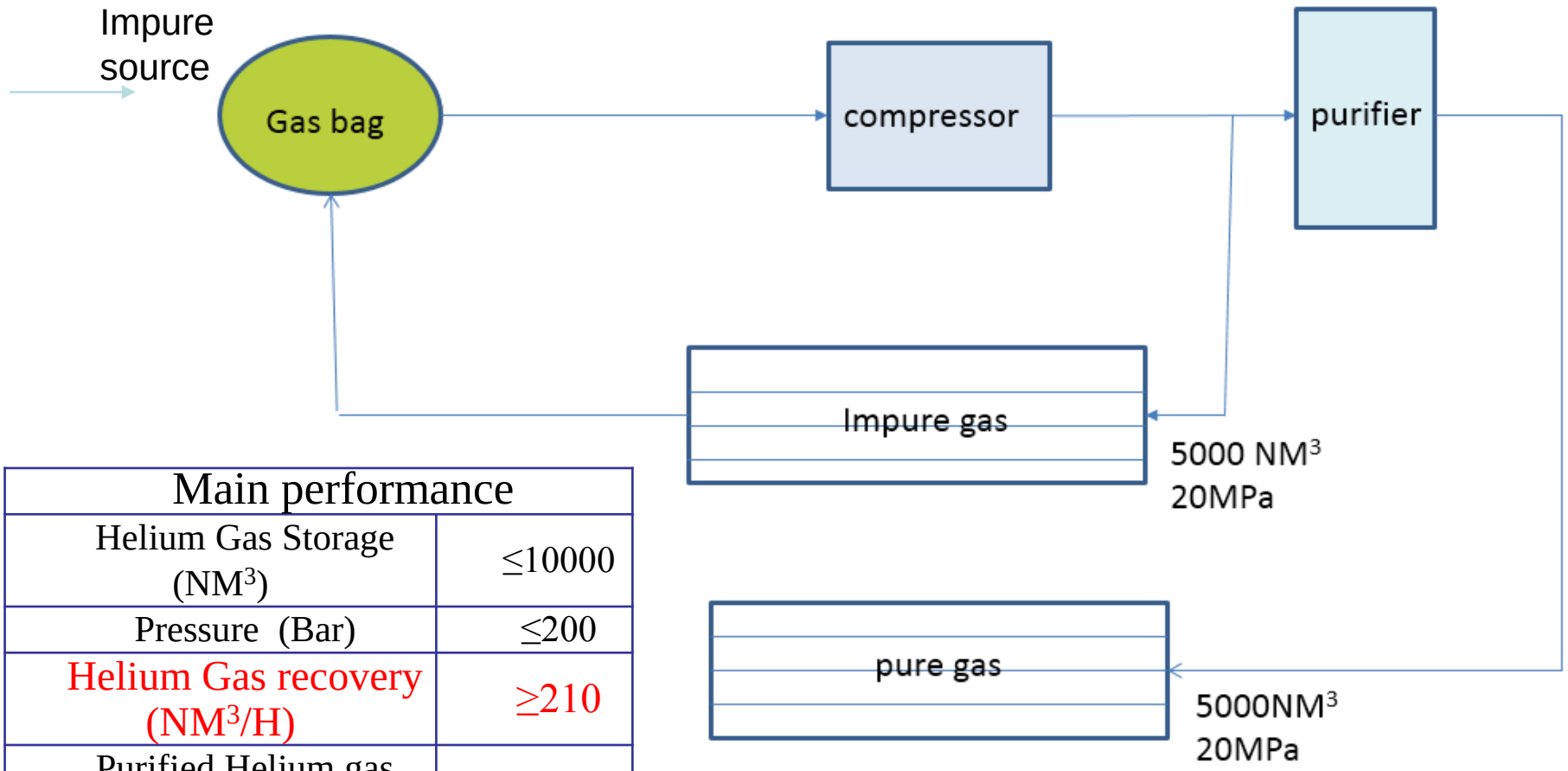

Main performance	
Helium Gas Storage (NM^3)	≤10000
Pressure (Bar)	≤200
Helium Gas recovery (NM^3/H)	≥210
Purified Helium gas (%)	≥99.999
Operation Mode	Auto

Layout of nitrogen cryogenic system

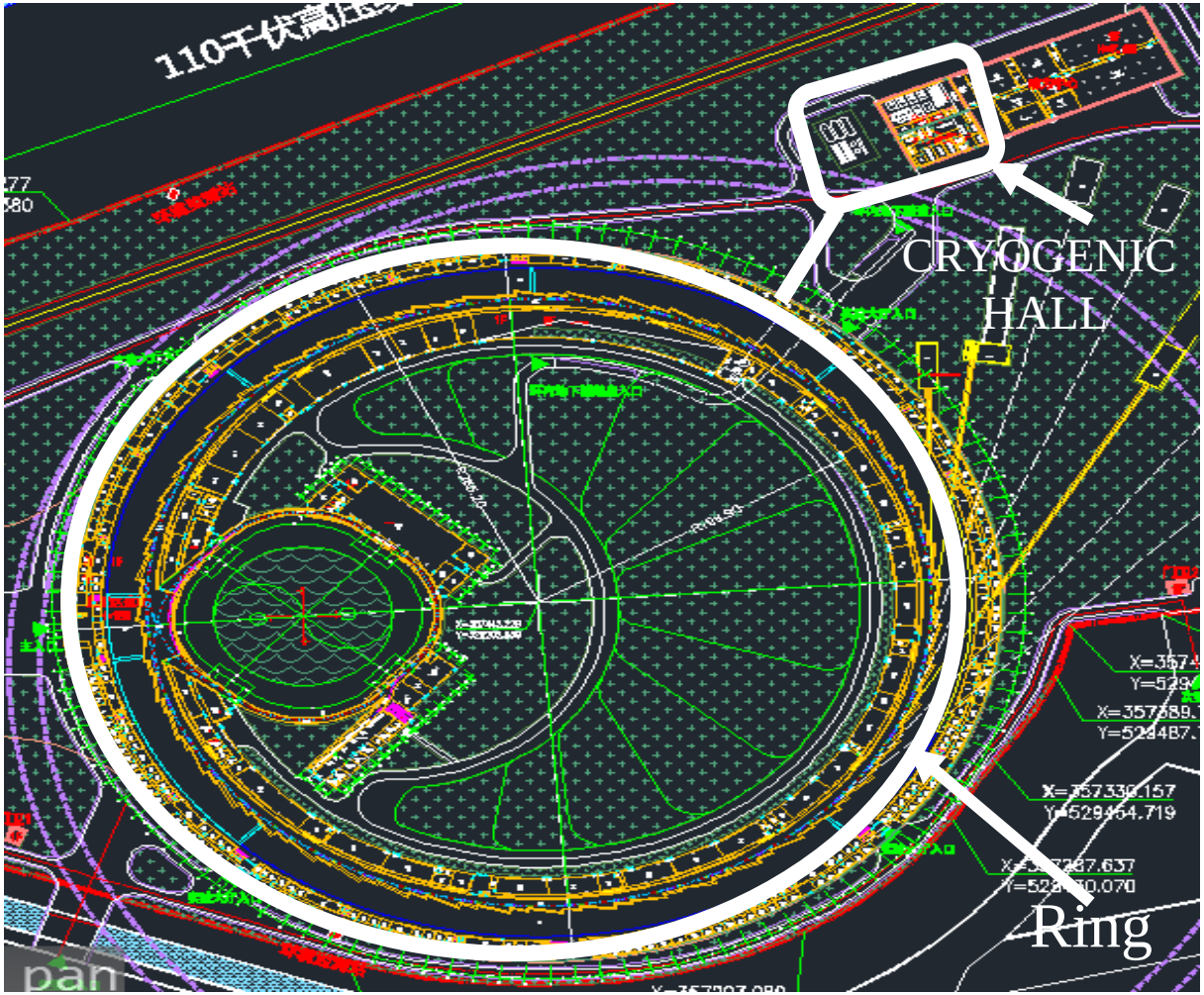

- Precooling 1 Helium refrigerator
- 7 SC cryostat thermal shield.
- Used to cool down CPMU and Cryostat-Monochromator for 15 Beam line.
- The final 80 beam line of which around 40 beam line with CPMU and Cryostat-Monochromator.
- A big challenge to design the nitrogen system.

Heat Loads

Name	User	Temperature	Number	Heat load	total
Beam line	Cryostal-Monochromator Transfer line	80K	15 1400m	573W 2W	11395W
Storge Ring	SC cryostat thermal shield	80K	7	700W	4900W
	Transfer line	80K	600m	2W	1200W
	CPMU	80K	9	660W	5940W
	Helium refrigerator	80K	1	7500W	7500W
Total heat loads		**46.41kW(+margin 50%)**			

- Used to cool down CPMU and Cryostal-Monochromator for 15 Photon Beam Station.
- Precooling 1 Helium refrigerator and 7 SC cryostat thermal shield.

Flow chart of Nitrogen refrigerator

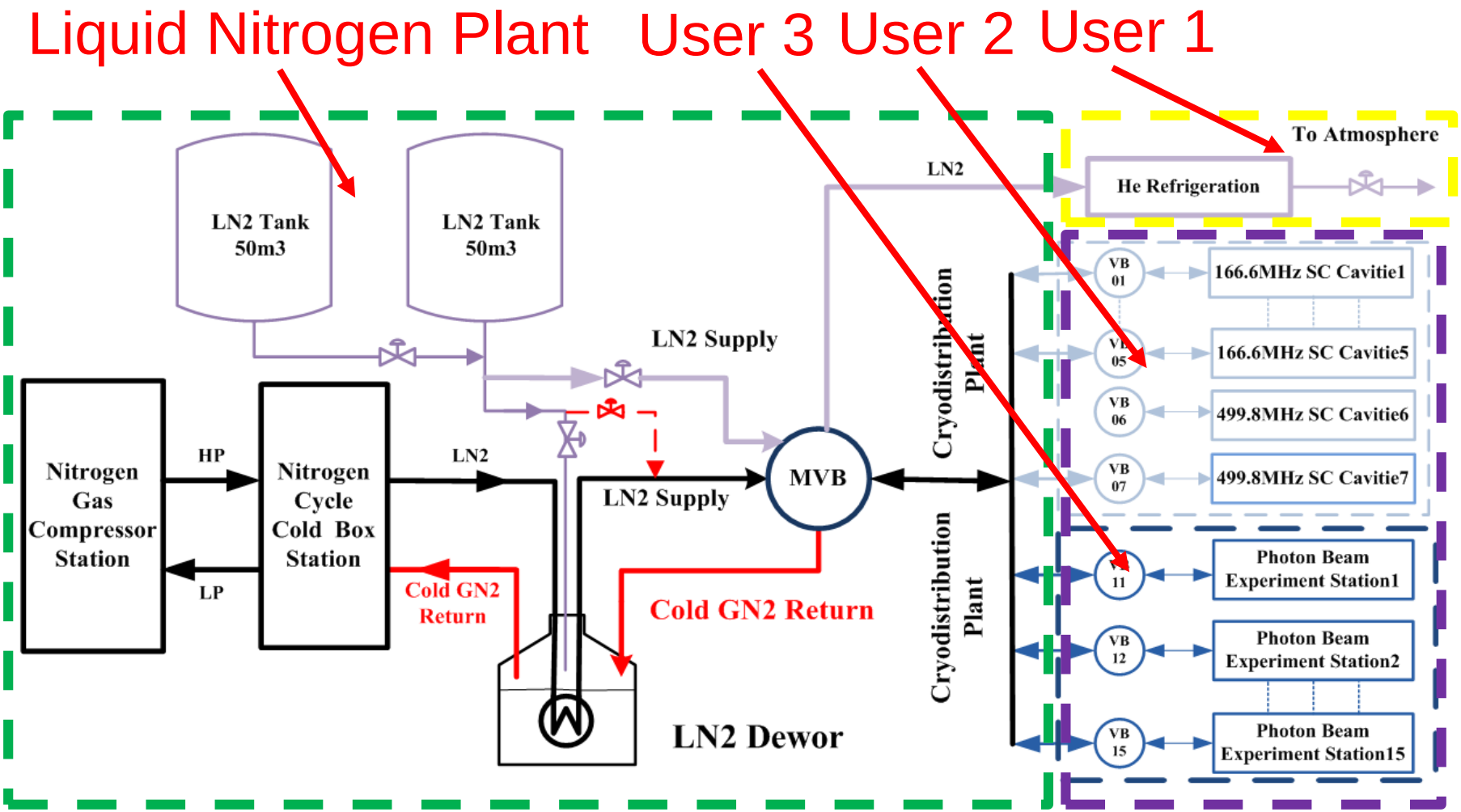

User 1 - Helium refrigerator

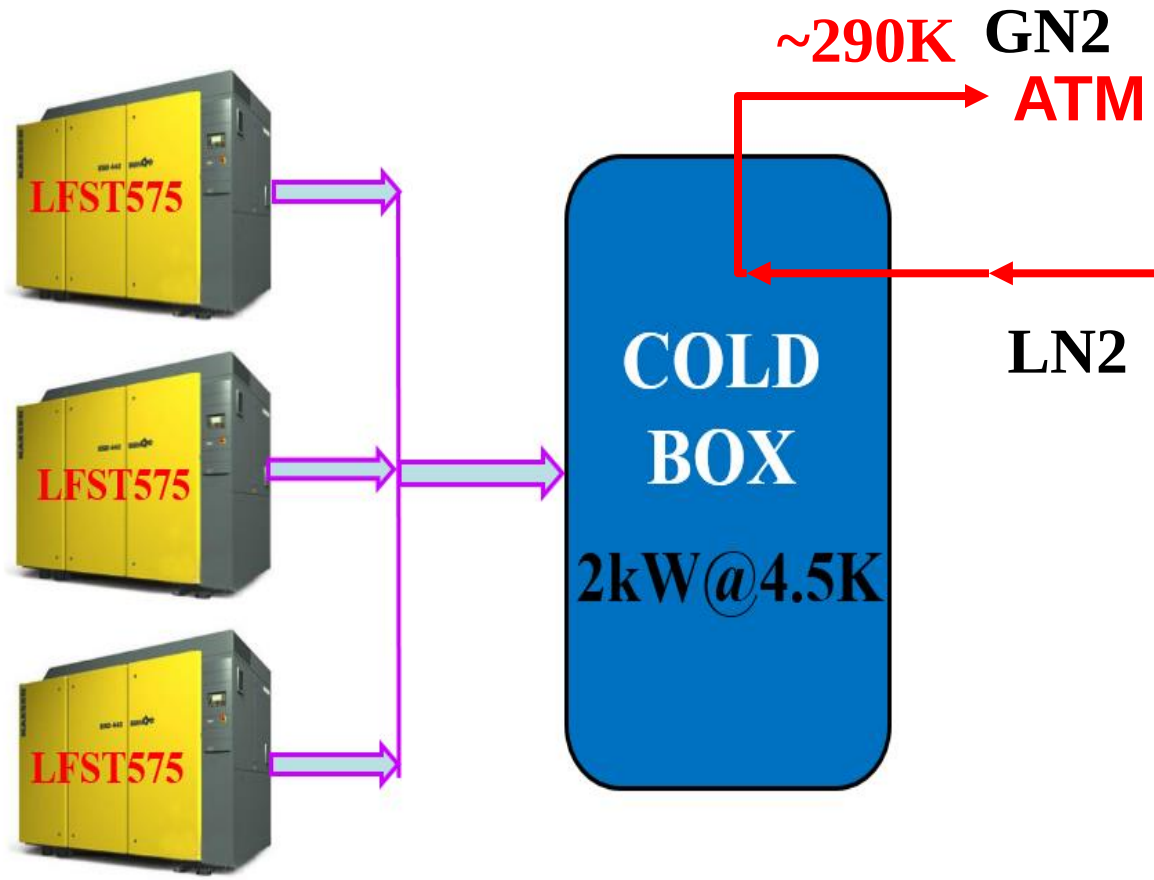

No cooling capacity can be recovered.
LN2 was supplied by the storage tank.

User 2 - SC cryomodules cold shield

7 SC cryomodules

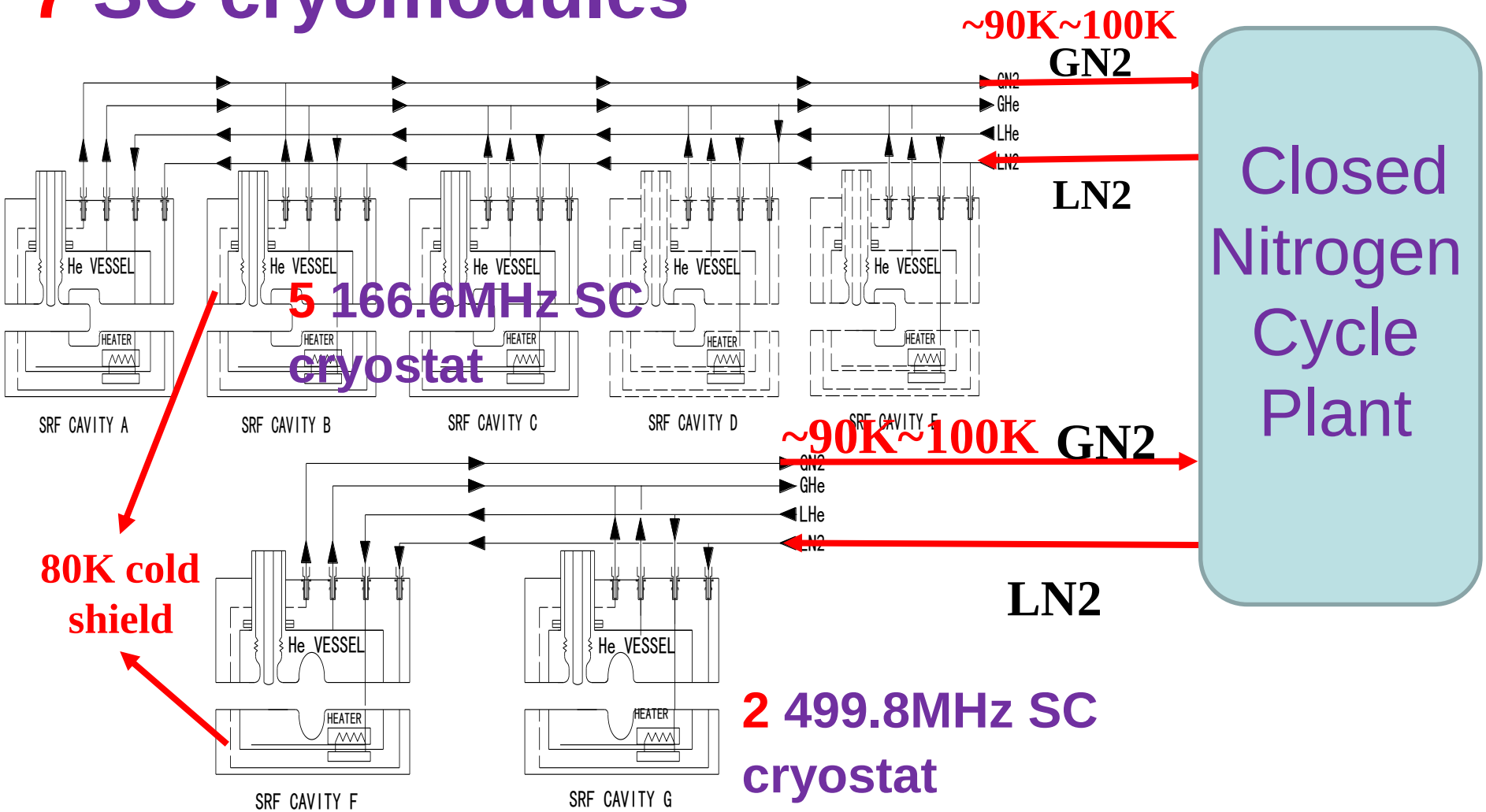

User 3 - Beam line station LN2

9 CPMU + 15 Crystal-Monochromator

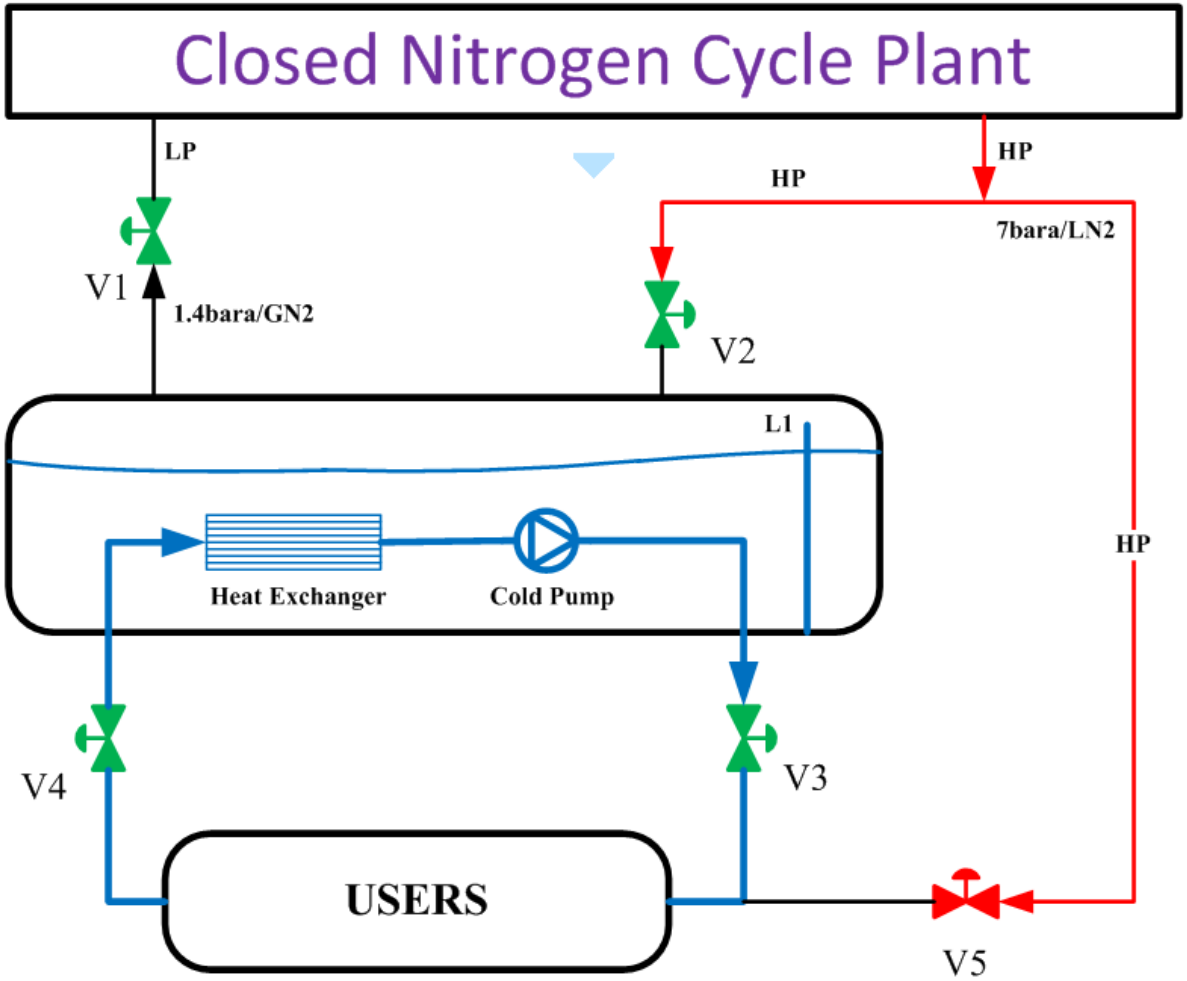

Cryogenic Transfer Line

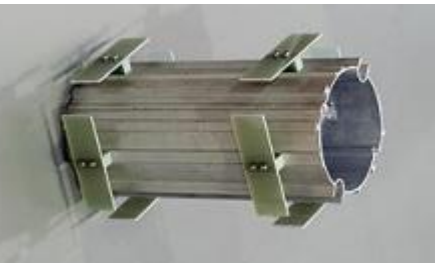

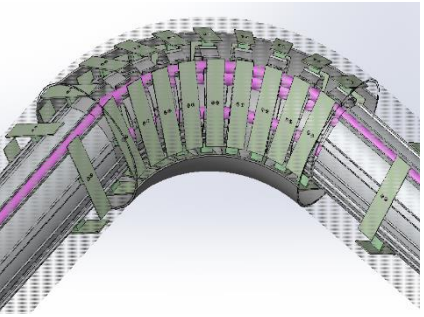

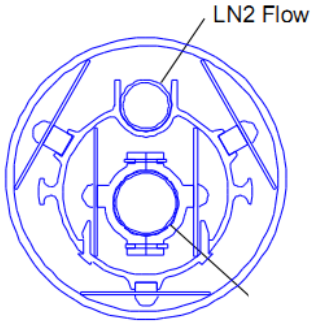

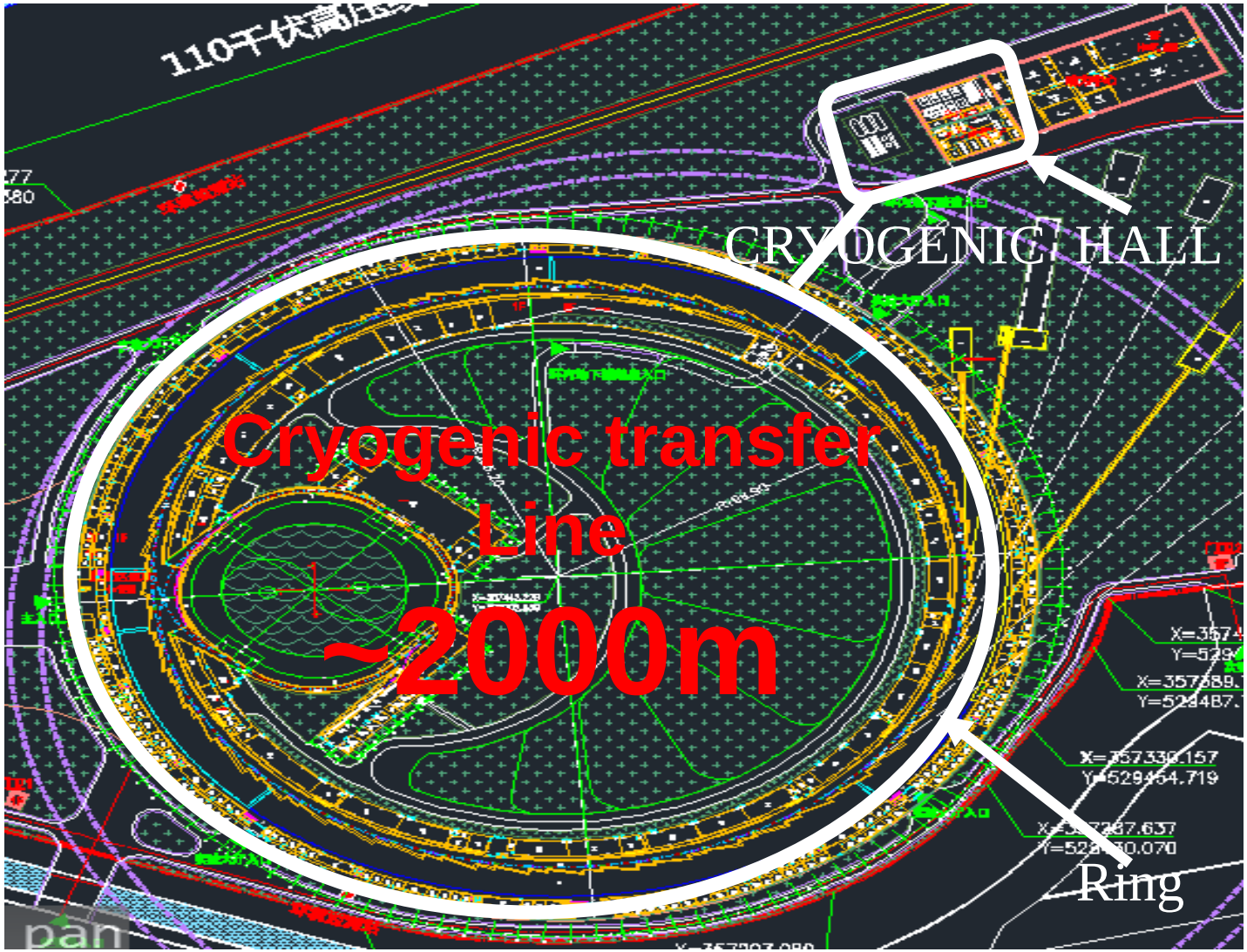

CEPC cryogenic system

CEPC-SppC

- A circular e+/e- collider as Higgs Factory has been studying at IHEP. The machine can be converted into a proton-proton collider for tens TeV high-energy frontier.

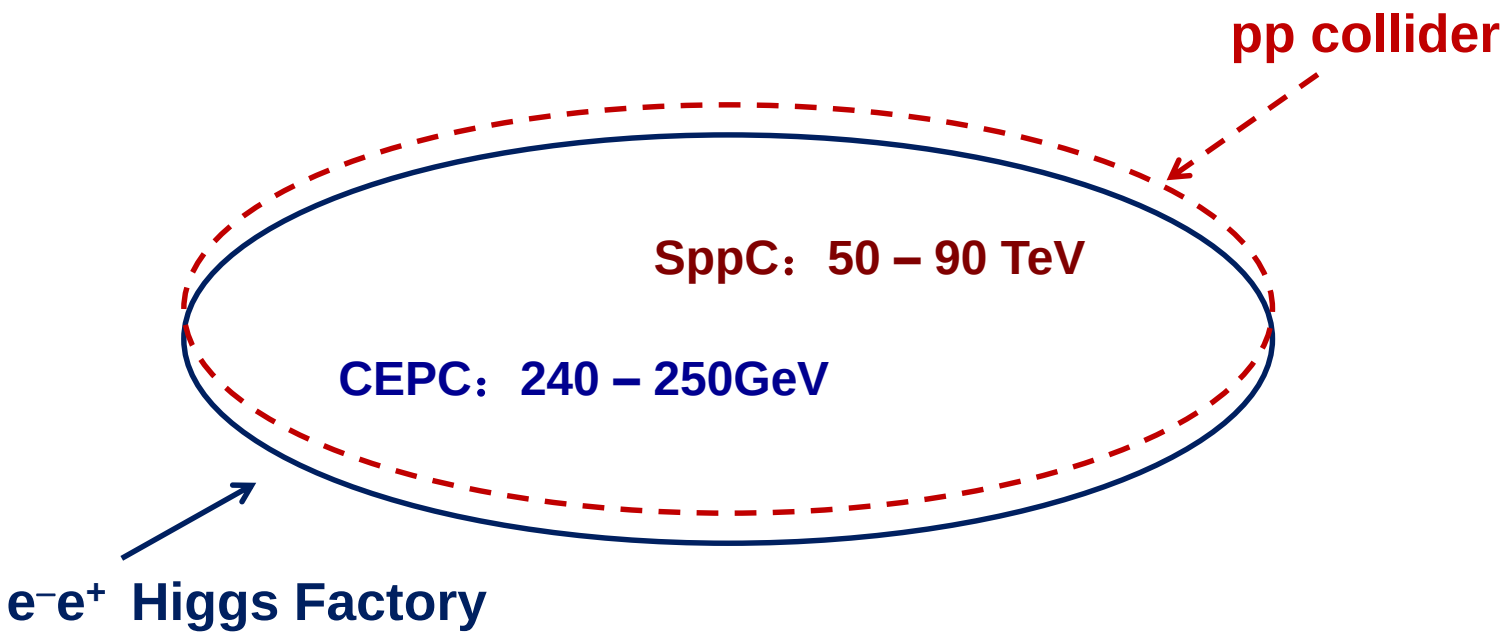

CEPC cryogenic system

Booster ring:

- 1.3 GHz 9-cell cavities, 96 cavities
- 12 cryomodules
- 3 cryomodules/each station
- Temperature: 2K/31mbar

Collider ring:

- 650MHz 2-cell cavities, 240 cavities
- 40 cryomodules
- 10 cryomodules/each station
- Temperature: 2K/31mbar

IR magnets:

- 44 magnets, 36 cryomodules
- 18 cryomodules/each station
- Temperature: 4.5 K/1.3 bar

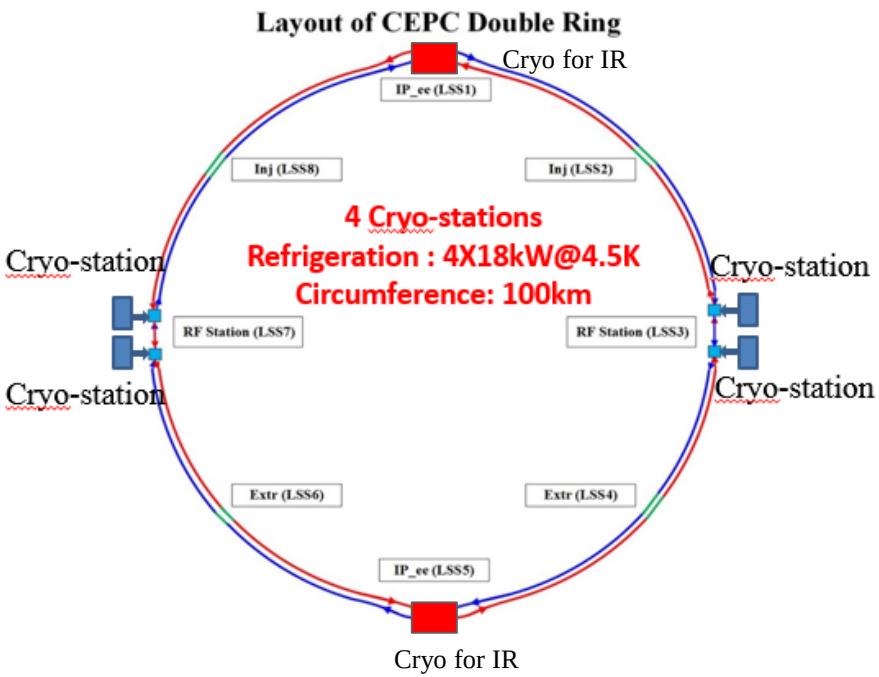

Parameters of SC cavities related for Cryogenic system

	Collider			Booster		
mode	H	W	Z	H	W	Z
Frequency(MHz)	650	650	650	1300	1300	1300
Cavity operating voltage (MV)	9.04	0.10	0.90	19.17	11.72	12.19
Duty factor	CW	CW	CW	0.043	0.029	0.079
Total number of cavities	240	216	120	96	64	32
Total number of modules	40	36	20	12	8	4
Eacc (MV/m)	19.66	9.46	3.62	19.77	8.81	8.64
R/Q	213	213	213	1036	1036	1036
Q0	1.50E+10	1.50E+10	1.50E+10	1E+10	1E+10	1E+10
Operation temperature (K)	2	2	2	2	2	2
Cavity dynamic heat load@ 2K (W/cavity)	25.59	5.93	0.87	1.75	0.23	0.61
Cavity dynamic heat load@ 2 K (W/module)	153.52	35.57	5.22	13.98	1.87	4.91

Heat load

Higgs Mode	Unit	Collider			Booster		
		40-80K	5-8K	2K	40-80K	5-8K	2K
Predicted static heat load per cryomodule	W	300	60	12	140	20	3
Cavity dynamic heat load per cryomodule	W	0	0	153.59	0	0	13.98
HOM dynamic heat load per cryomodule	W	20	12	2	2	1	1
Input coupler dynamic heat load per cryomodule	W	60	40	6	40	3	0.4
Module dynamic heat load	W	80	52	161.59	42	4	15.38
Connection boxes	W	50	10	10	50	10	10
Cryomodule number		40			12		
Total heat load	kW	17.20	4.88	7.34	2.78	0.41	0.34
Total predicted mass flow	g/s	82.42	152.26	346.58	13.34	12.73	16.07
Overall net cryogenic capacity multiplier		1.54	1.54	1.54	1.54	1.54	1.54
4.5K equiv. heat load with multiplier	kW	1.99	6.80	36.18	0.32	0.57	1.68
Total 4.5K equiv. heat load with multiplier	kW	44.96			2.57		
Total 4.5K equiv. heat load of booster and collider	kW	47.53					

Heat load and installed power with different working modes

	Collider			Booster		
	H	W	Z	H	W	Z
Total heat load @ 4.5 K (kW)	44.96	19.81	9.24	2.57	1.51	1.23
Total installed power (MW)	9.84	4.34	2.02	0.56	0.33	0.27

	H	W	Z
Total heat load @ 4.5 K (kW)	47.53	21.32	10.47
Total installed power (MW)	10.40	4.67	2.29

•Four individual 18kW@4.5K refrigerators will be employed for the CEPC cryogenic system.

Flowchart of one Cryo-station

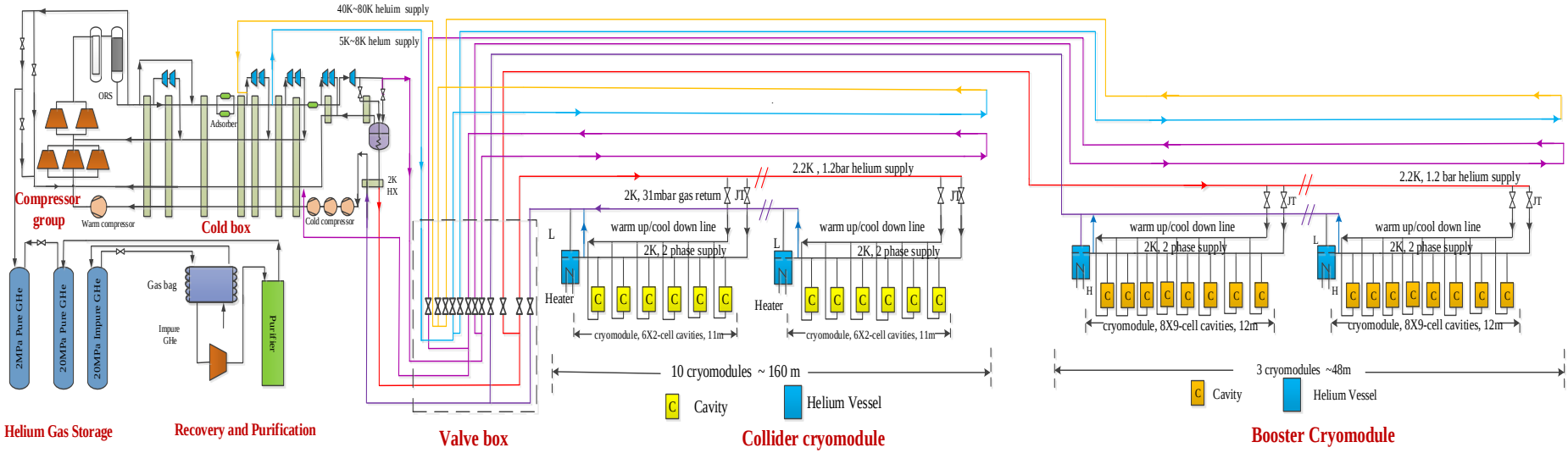

- Each Cryo-station mainly includes compressor, cold box, helium gas storage tanks, cryomudules and purification system.
- The cryomodules have two shields, a 40K~80K shield and a 5K~8K shield.
- A 2.2K, 1.2bar helium is supplied for the cryomodules and the 2K, 31mbar helium gas return to the cold box with the cold compressors.

Refrigeration

- **With a 35% margin, four individual 18kW@4.5K refrigerators will be employed.**
- **The total cryogenic capacities are equivalent to 72kW at 4.5K.**

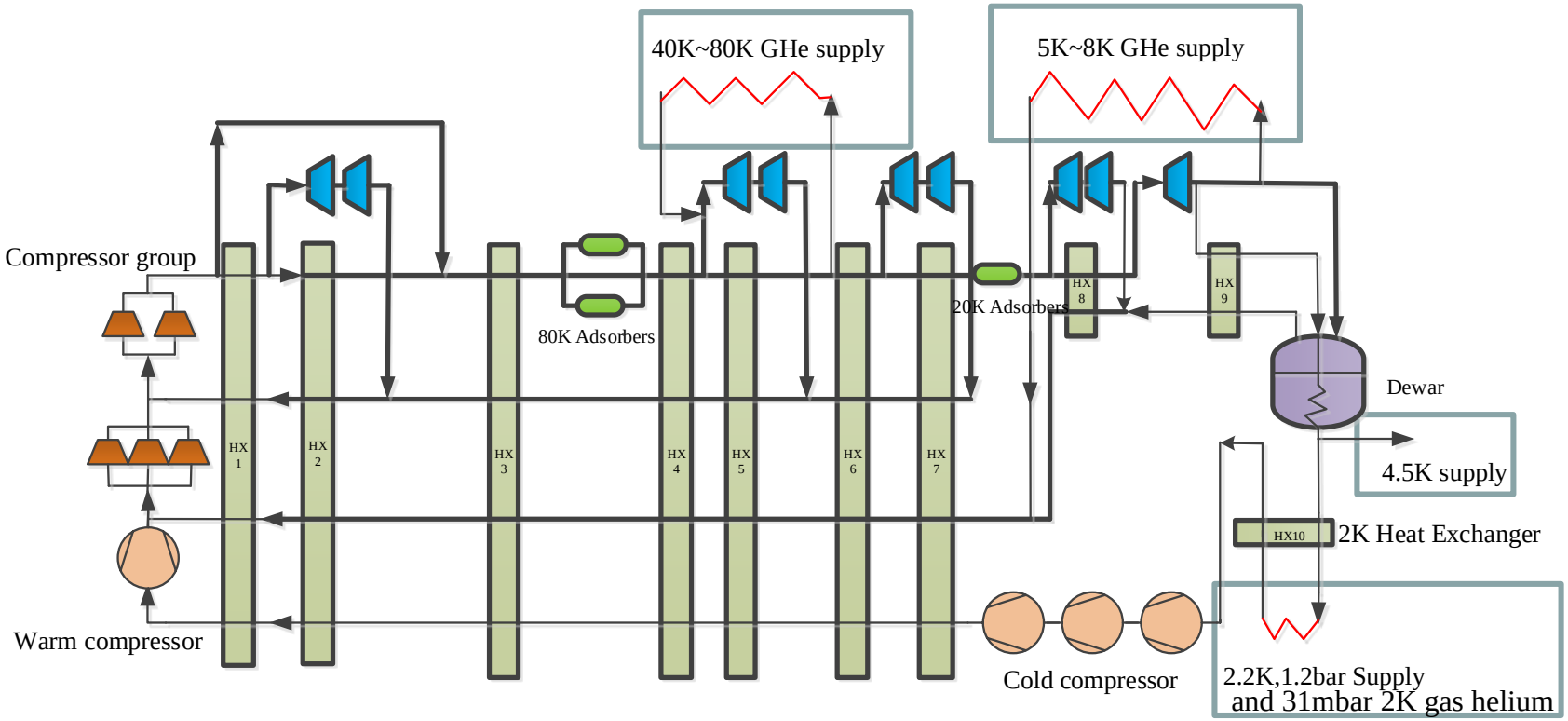

Cooling scheme for Collider

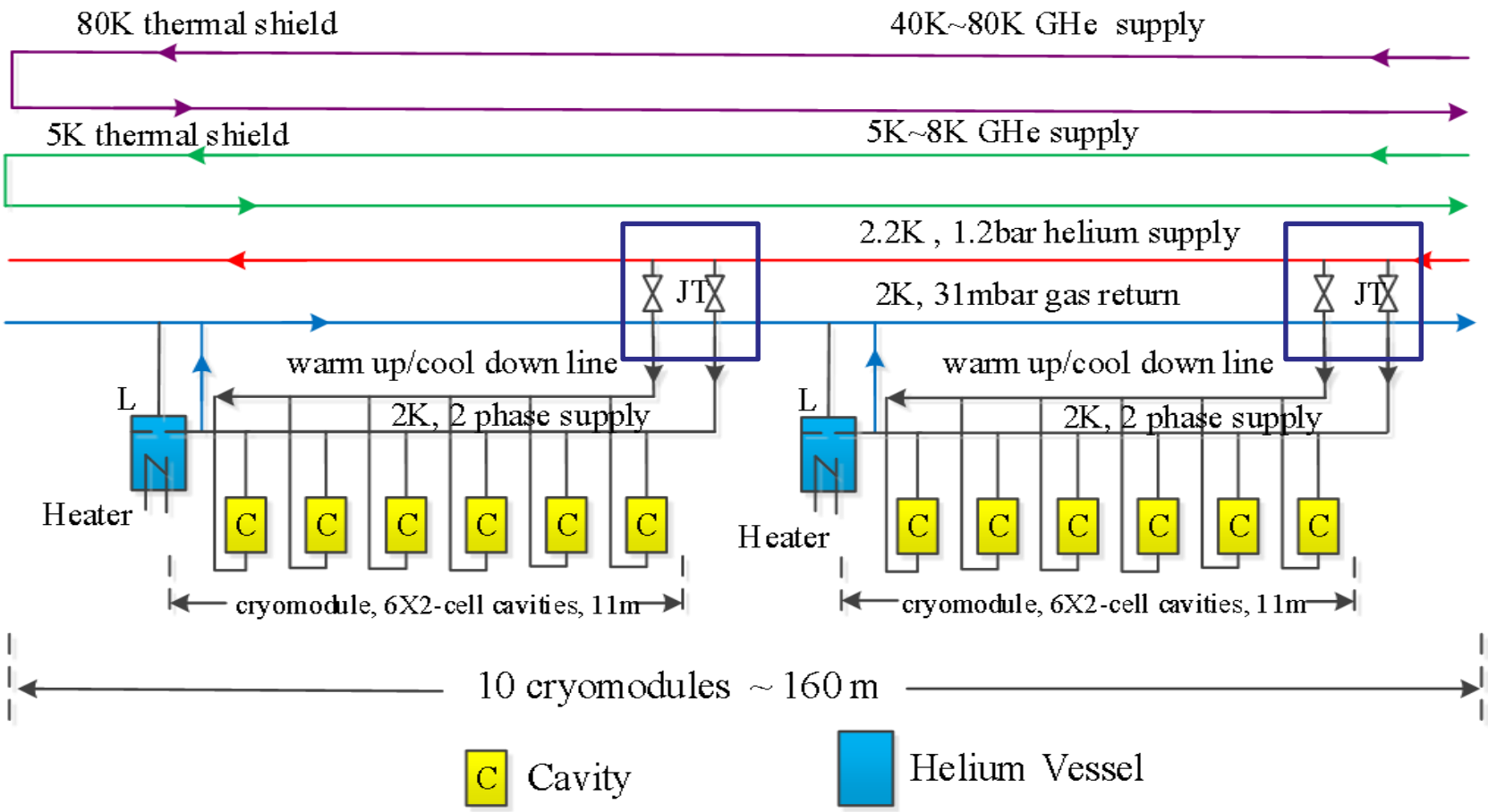

Cooling scheme for Booster

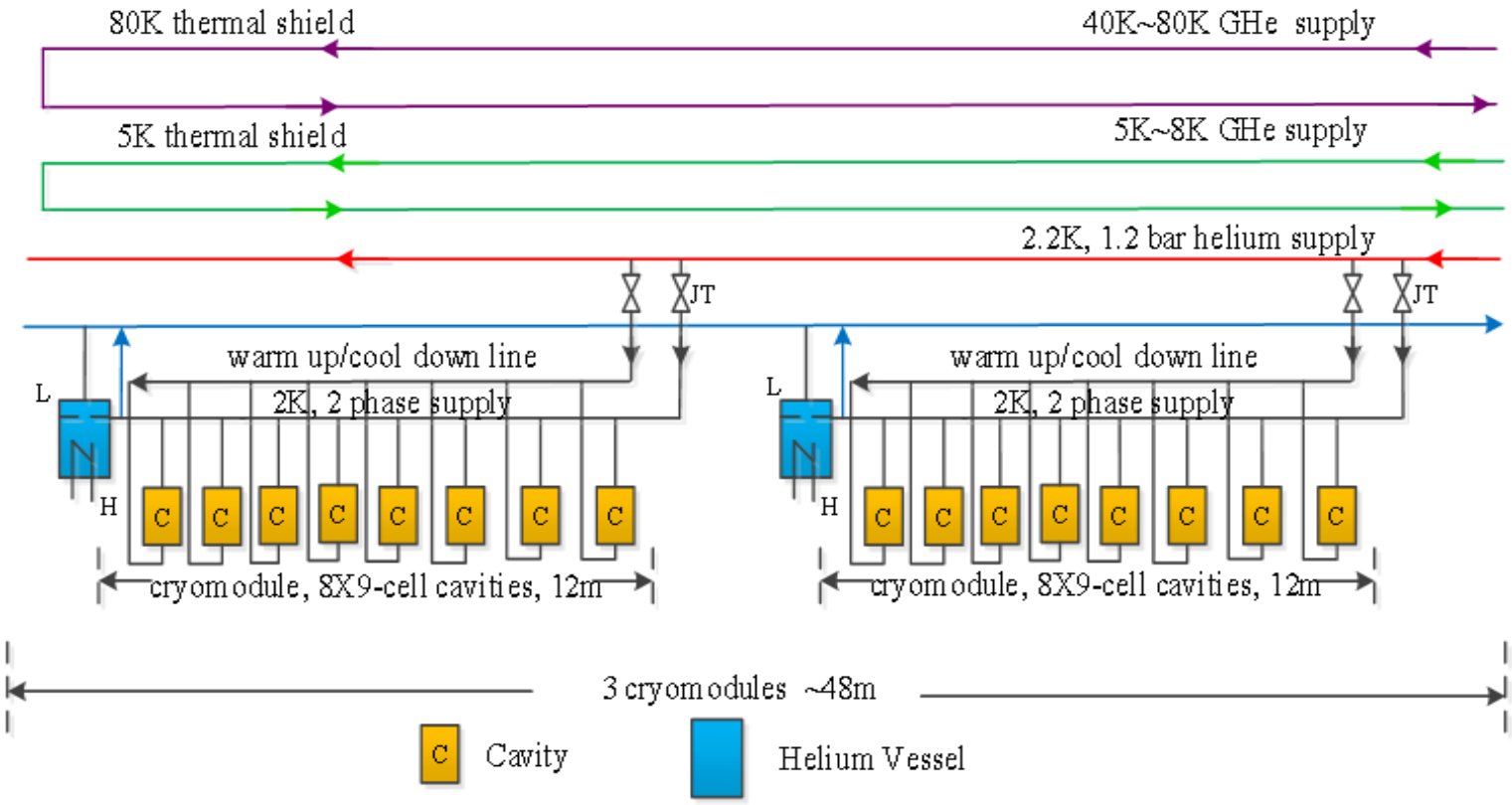

Infrastructure

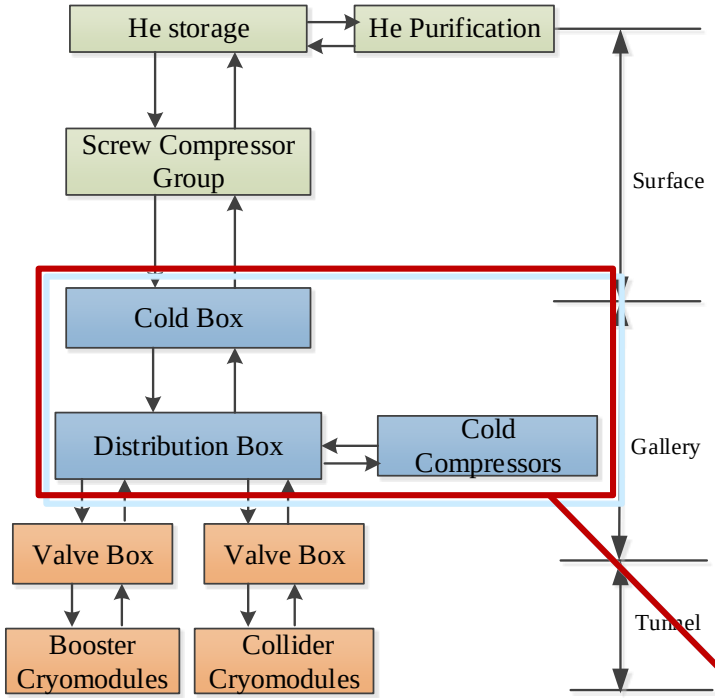

Each cryo-station has an underground plant in the gallery, the size is 37m * 8m.

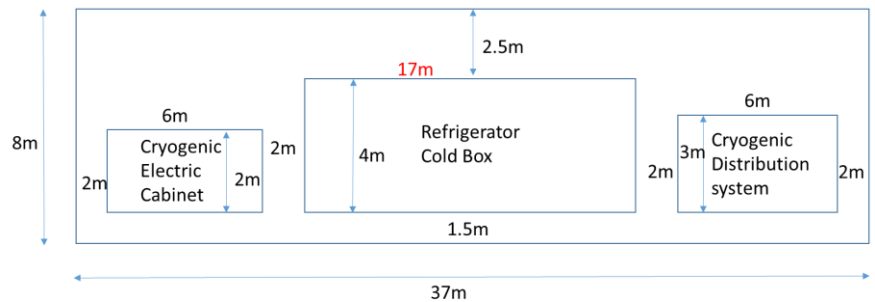

Layout of CEPC refrigerator in gallery

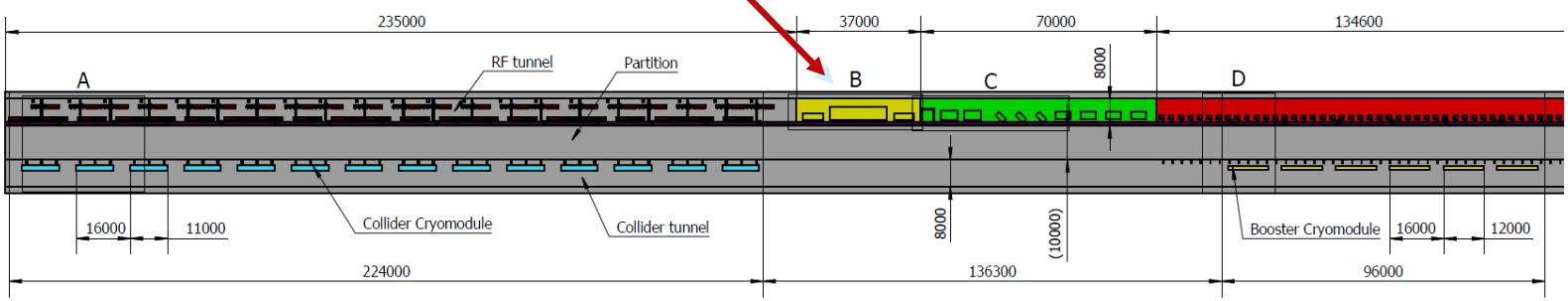

Infrastructure

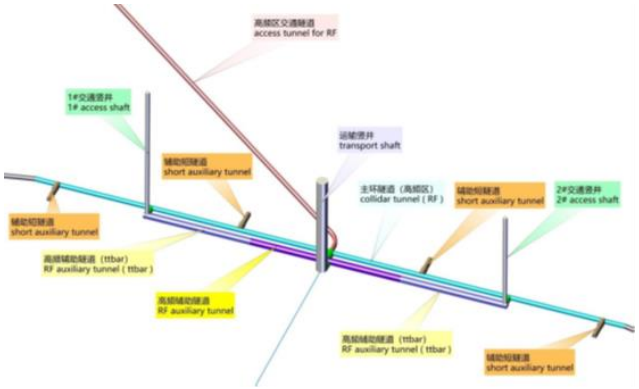

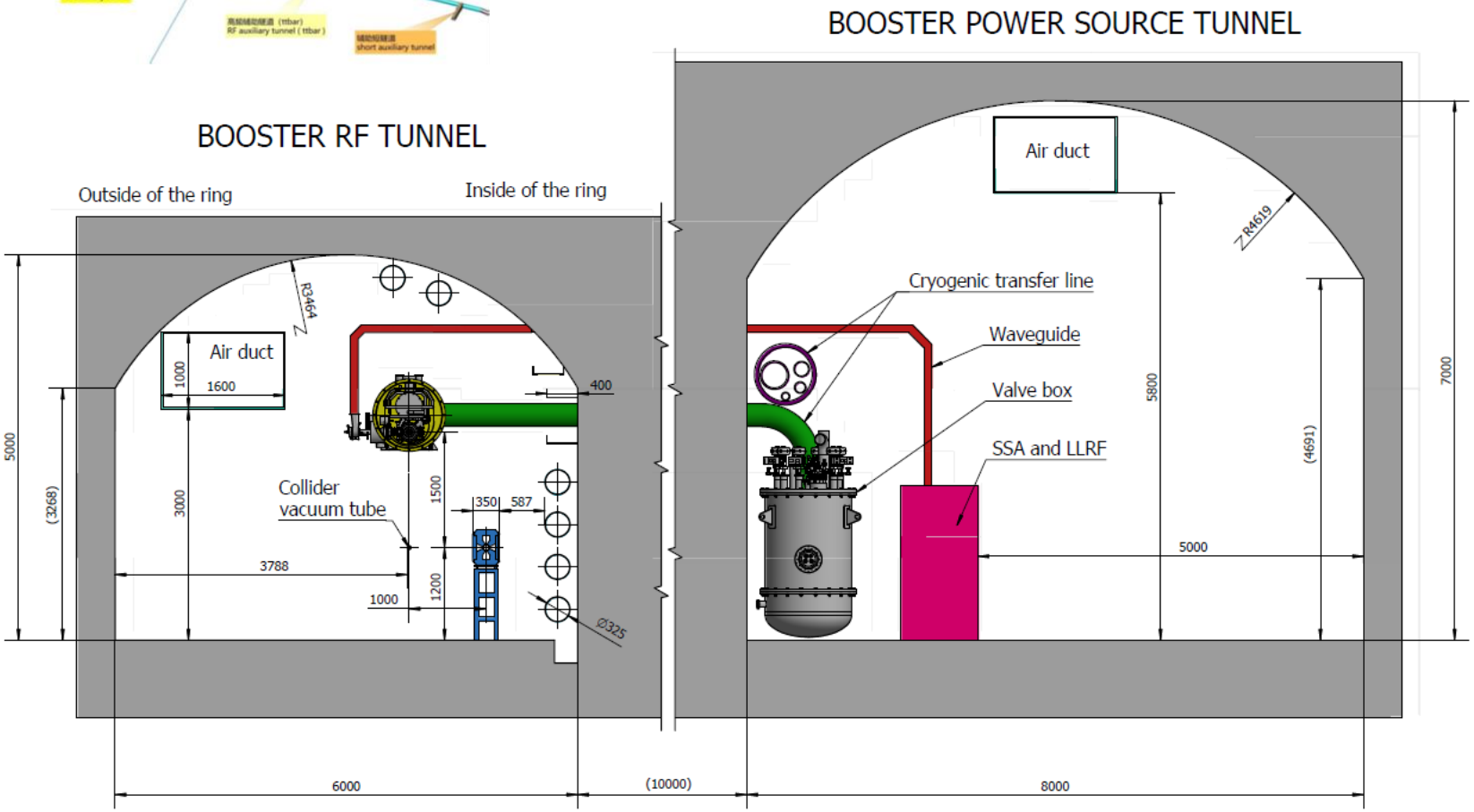

Infrastructure

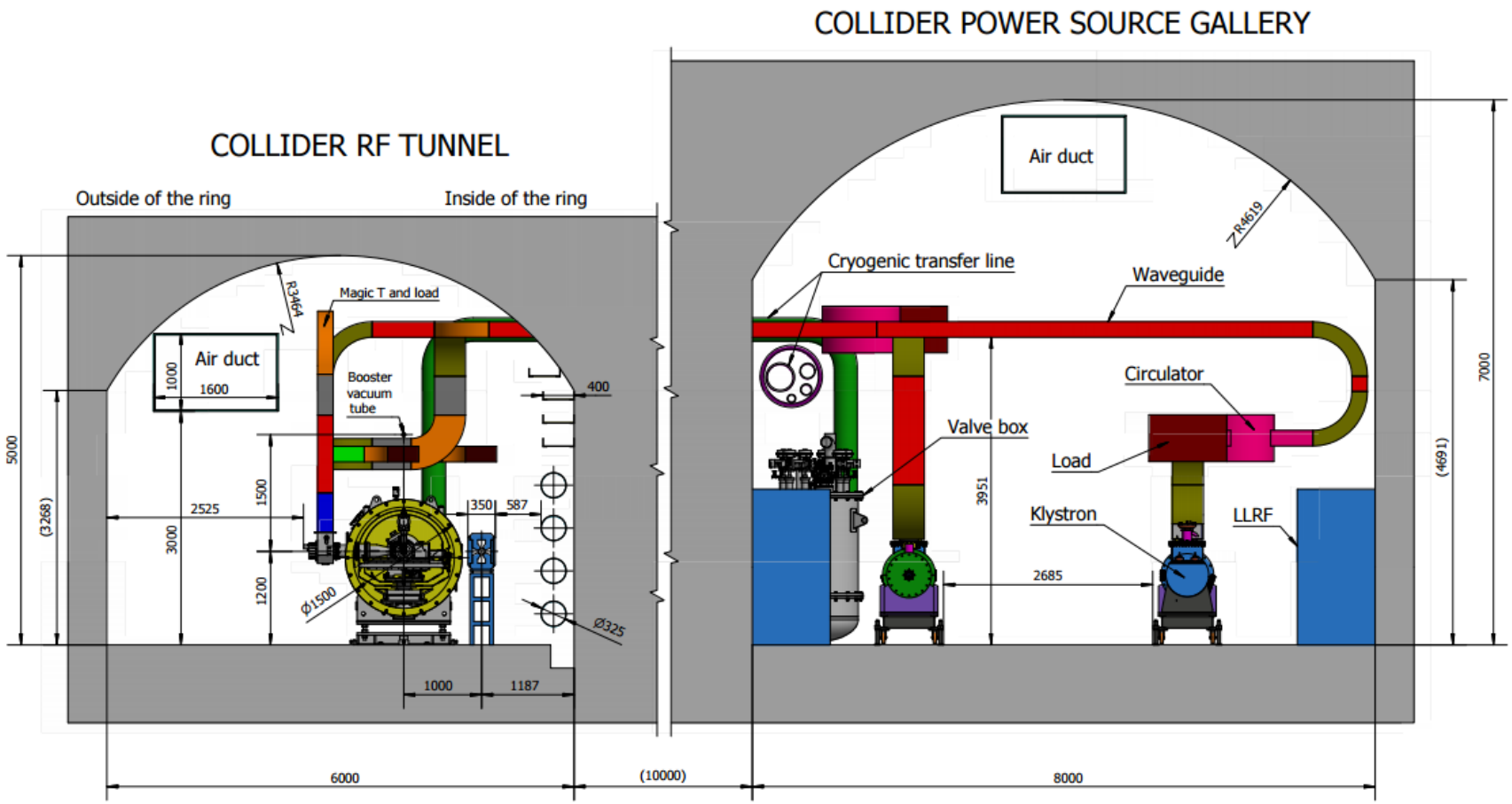

Cryogenics for SC magnets

- 2 IPs in CEPC Interaction Region, there are 4 QD0 magnets, 4 QF1 magnets, 4 anti-solenoids and 32 sexupole magnets.
- There are 2 cryo-stations, each one with a refrigerator of 3kW@4.5K.

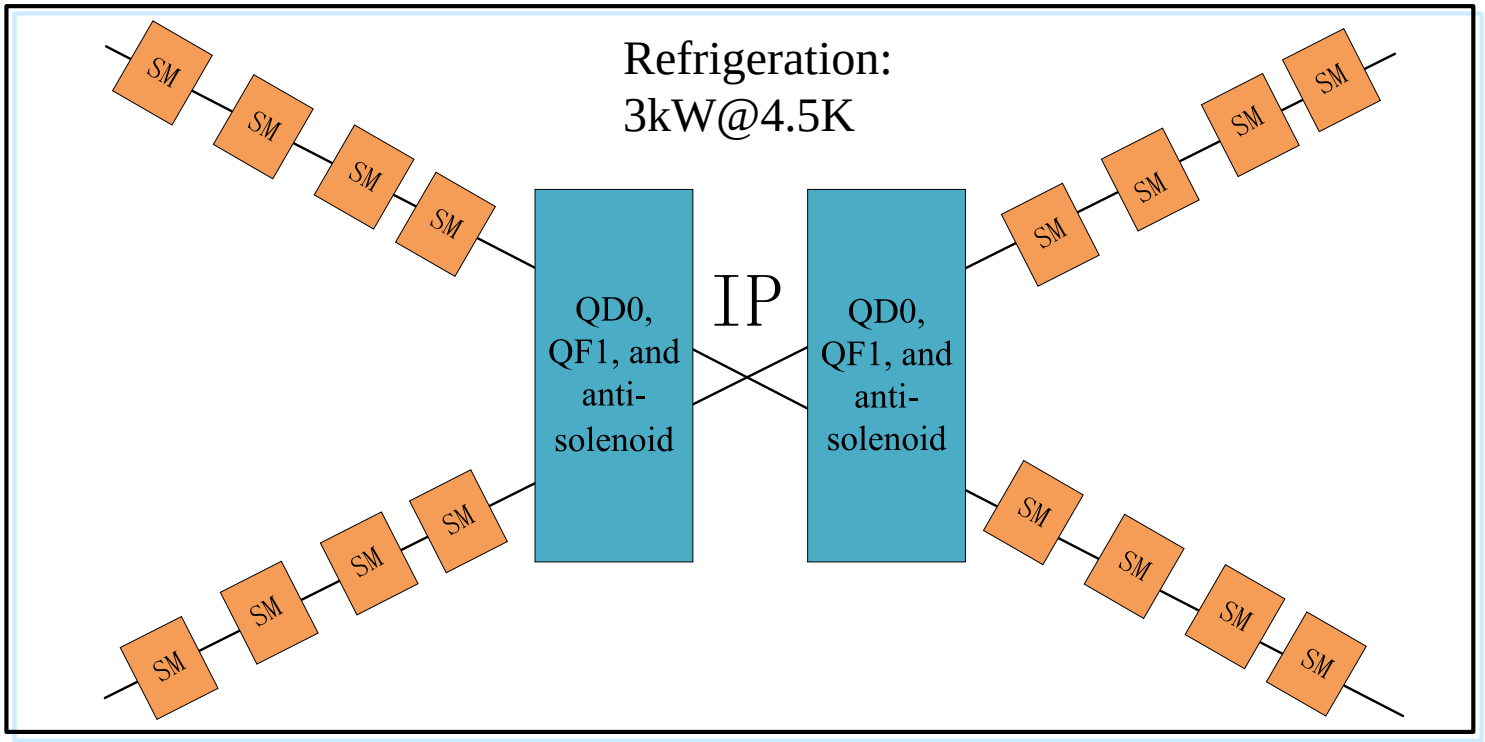

Cryogenics for SC magnets

Name	Unit	No.	Heat load for each	Heat load
IR SC sextupole magnet	W	32	10	320
Valve Box of IR SC sextupole magnet	W	32	20	640
Current lead of IR SC sextupole magnet	g/s	32	0.1	3.2
IR SC magnet	W	4	30	120
Valve Box of IR SC magnet	W	4	30	120
Current lead of IR SC magnet	g/s	4	0.5	2
Main distribution valve box	W	2	50	100
Cryogenic transfer-line	W	4000	0.5	2000
Total equiv. heat load @4.5K	W	/	/	3820
Total equiv. heat load @4.5K with multiplier 1.5	W	/	/	5730
Cooling capacity of refrigerator@4.5K	W	2	3000	6000
Installed power (COP 300W/1W)	MW	/	/	1.8

Cryomodule for 650MHz 2-cell cavities

- Including six 2-cell 650 MHz superconducting cavities, six high power couplers, six mechanical tuners and two HOM absorbers
- Fast Cool-down is introduced, means 10K/minute below 45K.

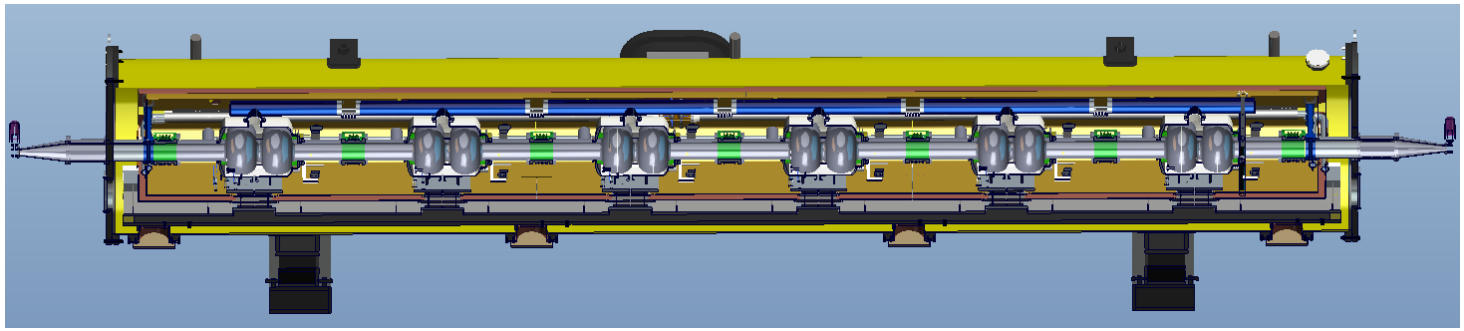

Six 2-cell Cavities Cryomodule	
Overall length(flange to flange, m)	8.0
Diameter of Vacuum vessel ,m	1.3
Beamline height from floor, m	1.5
Cryo-system working temperature, K	2
Number of 200-POST	6

Cryomodule performance		Specification
Number of leakage	He →insulation	0
	He →beam pipe	0
	Insulation →coupler	0
	Insulation →beam pipe	0
	Coupler →beam pipe	0
Alignment x/y inside (Cavities)		±0.5mm
Alignment z inside		within 2 mm
Coupler antenna design z		within 2 mm

Cryomodule for 1.3GHz 9-cell cavities

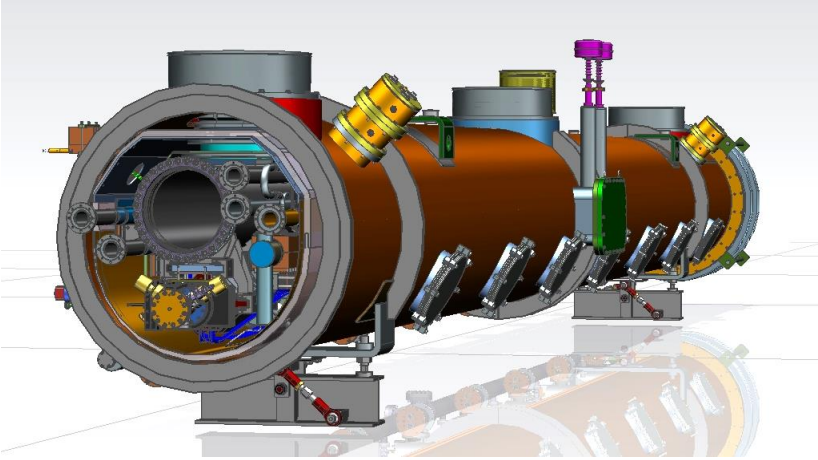

Design Goals:
- Low heat loss
- Fast cool down

XFEL / LCLS-II type Cryomodule for High Q Cavity

- Cryogenic Group in IHEP has manufactured 58 1.3GHz 9-cell Cryomodules for EXFEL cooperated with domestic companies.
- It’s a good foundation for the optimization design for the CEPC cryomodules.

TDR plan of CEPC Cryogenics (2019-2022)

- **Technical design of Cryogenics (2019-2020)**
  - Detailed flow process design
  - Warm-up and cool-down strategy
  - Technical parameters for the equipment
  - Design of vacuum system for cryogenics
  - Design of safety system for cryogenics
  - Requirements for the refrigeration
- **Layout and the design of the equipment (2020-2022)**
  - Layout of the Cryogenic system
  - Structure design of the equipment, such as cryomodules, valve box and cryogenic transfer lines.
- **Cryogenic process control (2021-2022)**
  - Detailed design of high available control system
  - Automation of the cryogenic processes and interlock protection
  - **TDR report for the CEPC cryogenic system (2022)**

Summary

- **Since 2002, from the design of BEPCII cryogenic system, IHEP has accumulated 15 years of experience in the design, construction and operation of the cryogenic system.**
- **A professional team of cryogenic engineering has been built, which supports the construction and development of large science engineering projects at IHEP.**

Thank you for your attentions!