中科富海
FULLCRYO

Conceptual Design of 18kW@ 4.5K Helium cryostation

2019.11.19

Content

1. Requirement

2. Process design

3. Fullcryo Helium refrigerator

1、Requirements

Booster ring:

- 1.3 GHz 9-cell cavities, 96 cavities
- 12 cryomodules
- 3 cryomodules/each station
- Temperature: 2K/31mbar

Collider ring:

- 650MHz 2-cell cavities, 240 cavities
- 40 cryomodules
- 10 cryomodules/each station
- Temperature: 2K/31mbar

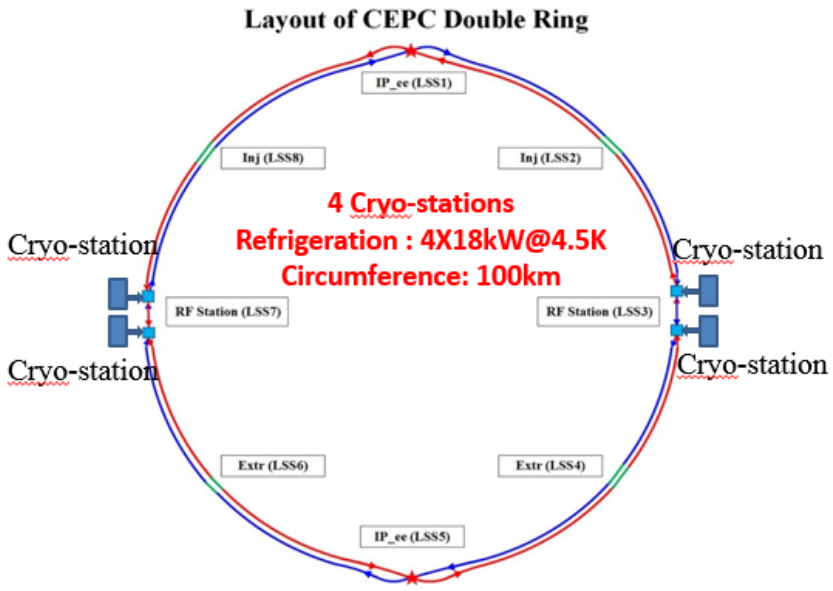

Layout of CEPC cryogenic system

1、Requirements

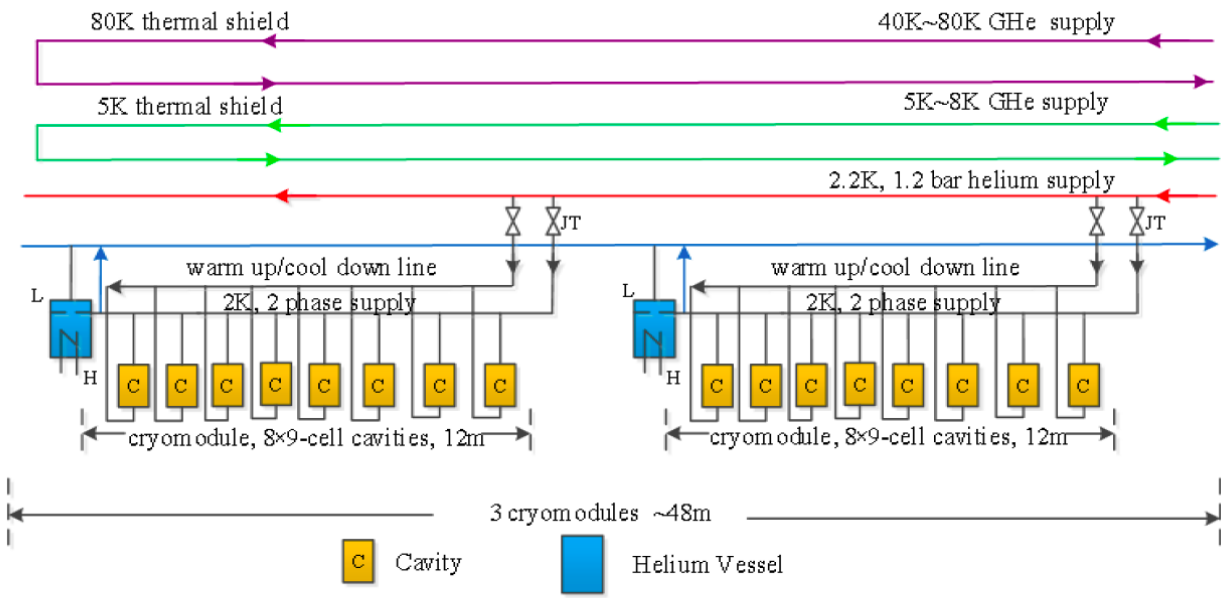

Figure 7.1.3: Booster cryomodules for string 1

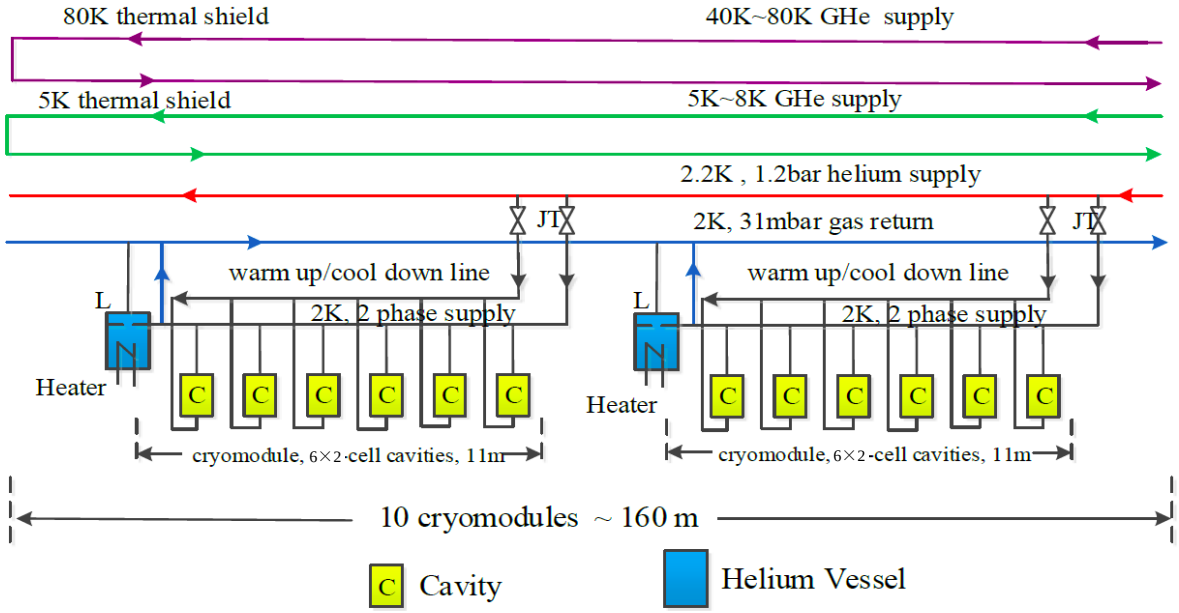

Figure 7.1.4: Collider cryomodules for string 2

1、Requirements

* Estimated Heat Load :

Higgs Mode	Unit	Collider			Booster		
		40-80K	5-8K	2K	40-80K	5-8K	2K
Predicted static heat load per cryomodule	W	300	60	12	140	20	3
Cavity dynamic heat load per cryomodule	W	0	0	153.59	0	0	13.98
HOM dynamic heat load per cryomodule	W	20	12	2	2	1	1
Input coupler dynamic heat load per cryomodule	W	60	40	6	40	3	0.4
Module dynamic heat load	W	80	52	161.59	42	4	15.38
Connection boxes	W	50	10	10	50	10	10
Cryomodule number		40			12		
Total heat load	kW	20.4	6.96	13.80	3.288	0.456	0.525
Overall net cryogenic capacity multiplier		1.54	1.54	1.54	1.54	1.54	1.54
4.5K equiv. heat load with multiplier	kW	2.017	7.362	48.246	0.325	0.482	1.835
Total 4.5K equiv. heat load with multiplier	kW	57.625			2.642		
Total 4.5K equiv. heat load of booster and collider	kW	60.27					

* CEPC Conceptual Design Report Volume I – Accelerator， P271

1、Requirements

* Designed Heat Load :

Higgs Mode	Unit	Collider			Booster		
		40-80K	5-8K	2K	40-80K	5-8K	2K
Predicted static heat load per cryomodule	W	300	60	12	140	20	3
Cavity dynamic heat load per cryomodule	W	0	0	153.59	0	0	13.98
HOM dynamic heat load per cryomodule	W	20	12	2	2	1	1
Input coupler dynamic heat load per cryomodule	W	60	40	6	40	3	0.4
Module dynamic heat load	W	80	52	161.59	42	4	15.38
Connection boxes	W	50	10	10	50	10	10
Cryomodule number		40			12		
Total heat load	kW	20.4	6.96	13.8072	3.288	0.456	0.525
Overall net cryogenic capacity multiplier		1.84	1.84	1.84	1.84	1.84	1.84
4.5K equiv. heat load with multiplier	kW	2.410	8.796	57.645	0.388	0.576	2.192
Total 4.5K equiv. heat load with multiplier	kW	68.850			3.157		
Total 4.5K equiv. heat load of booster and collider	kW	**72.0**					

1、Requirements

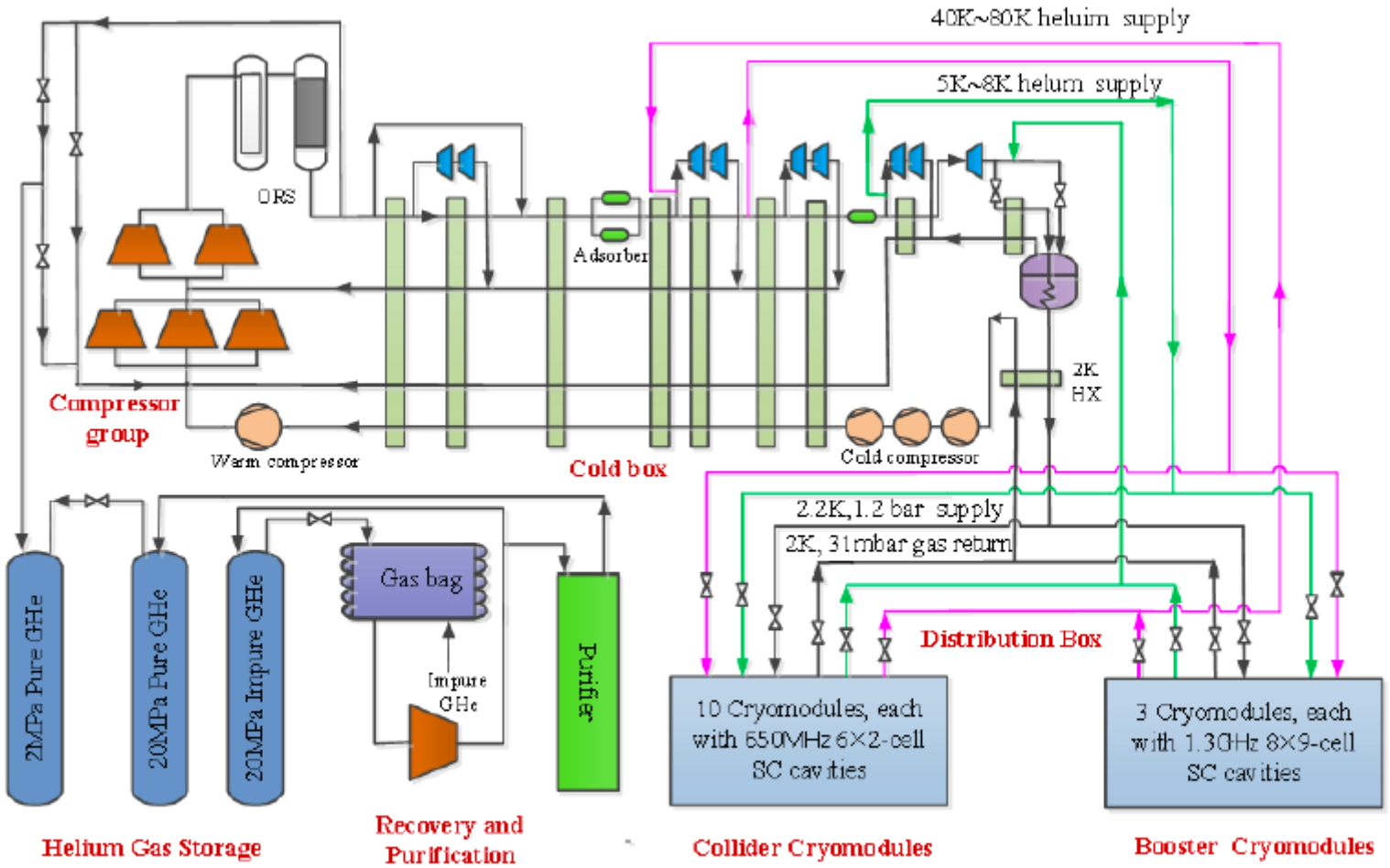

Figure 7.1.7: Cryogenic system schematic

4 Cryo-stations, each station serve：

- **3 cryomodules in Booster Ring**
- **10 cryomodules in Collider ring**

Heat Load for each station:

	40-80K	5-8K	2K
Heat Load （kW）	5.92	1.85	3.58

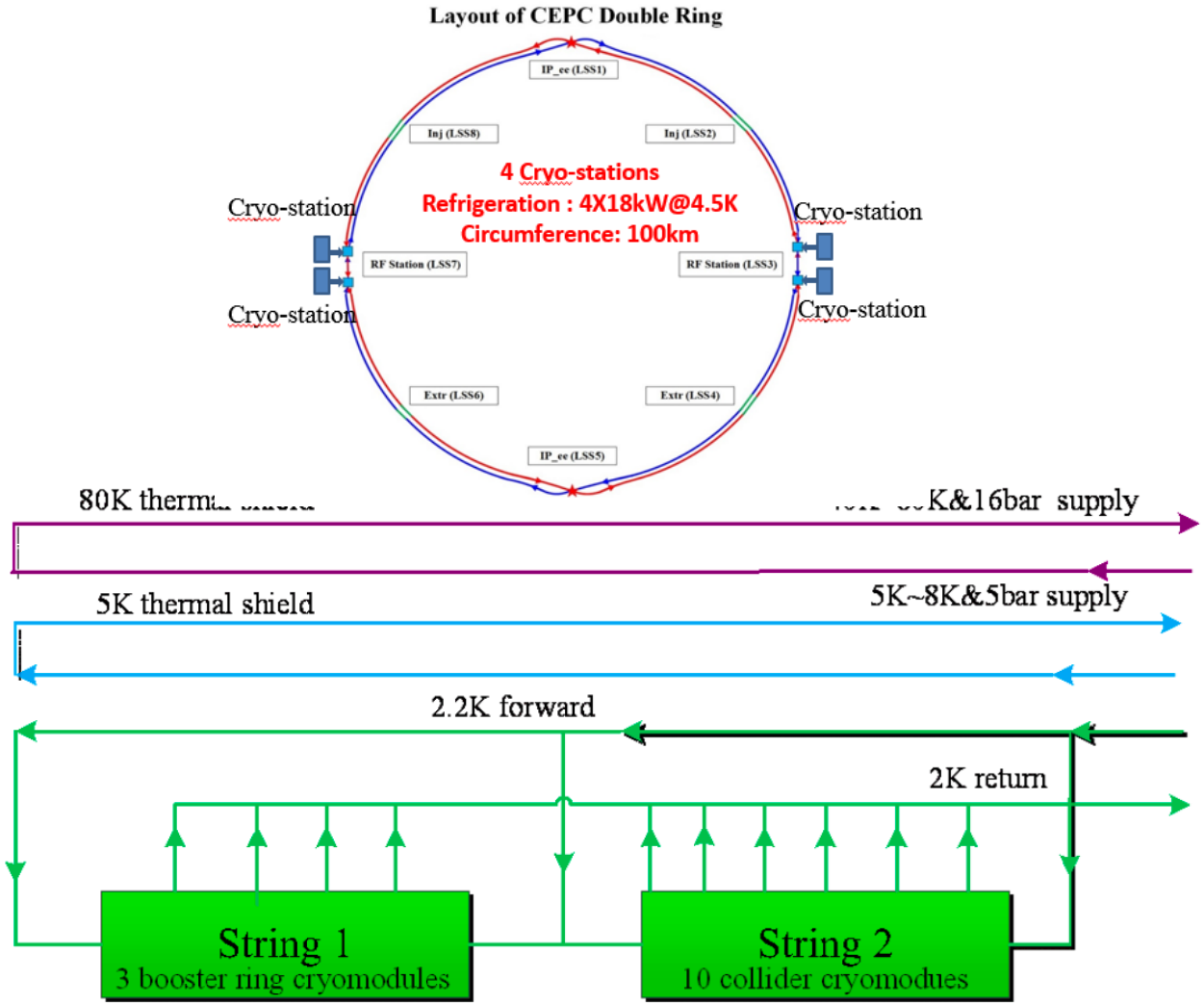

Figure 7.1.2: Cryogenic station

Content

1. Requirement
2. Process design
3. Fullcryo Helium refrigerator

2、Process design

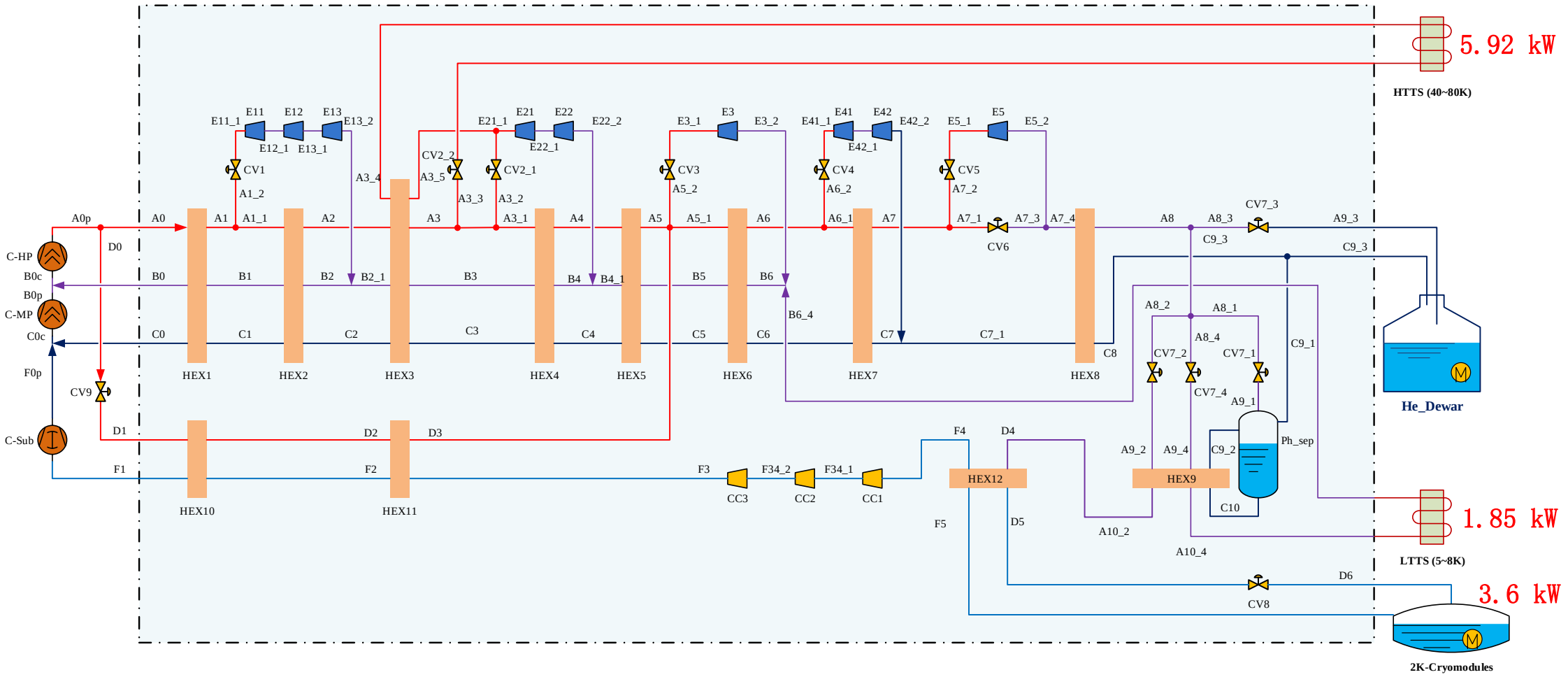

Process Flow scheme

2、Process design

Compressors:

Name	C-HP	C-MP	C-Sub	CC1	CC2	CC3
Power [kW]	2552.3	965.5	173.5	4.1	6.5	9.2
Mass Flow [g/s]	1400	636	180	180	180	180
Feed Pressure [bar]	4.05	1.05	0.4	2.80E-02	8.00E-02	0.2
Product Pressure [bar]	19.5	4.06	1.05	8.00E-02	0.2	0.43
Adiabatic Efficiency	75	75	75	60	60	60

Installed Power for each station: 3.71 MW

COP^{-1}: 3.71 MW/18kW= 206 W/W

2、Process design

Expanders:

Name	E11	E12	E13	E21	E22	E3	E41	E42	E5
Feed Pressure [bar]	18.50	12.49	7.69	18.50	9.00	18.50	18.50	6.99	18.00
Feed Temperature [K]	120.03	107.07	93.03	45.01	36.59	26.99	16.17	12.15	8.81
Product Pressure [bar]	12.50	7.70	4.11	9.00	4.15	4.18	7.00	1.19	6.90
Product Temperature [K]	107.07	93.03	77.62	36.59	29.26	18.03	12.15	7.28	7.31
Adiabatic Efficiency	75.00	75.00	75.00	75.00	75.00	72.00	70.00	70.00	55.00

Heat Exchangers:

Name	HEX1	HEX2	HEX3	HEX4	HEX5	HEX6	HEX7	HEX8	HEX9	HEX10	HEX11	HEX12
LMTD [K]	3.3	3.2	3.2	1.7	0.5	0.2	0.9	1.4	1.2	6.2	1.0	0.8
Exchanger Cold Duty [kW]	1214.0	254.3	208.2	67.6	14.0	45.0	22.1	3.1	1.2	205.0	46.5	2.9
UA (Calculated) [kJ/C-s]	367.8	80.1	64.5	40.8	30.7	183.3	24.0	2.2	1.0	33.1	46.8	3.5

2、Process design

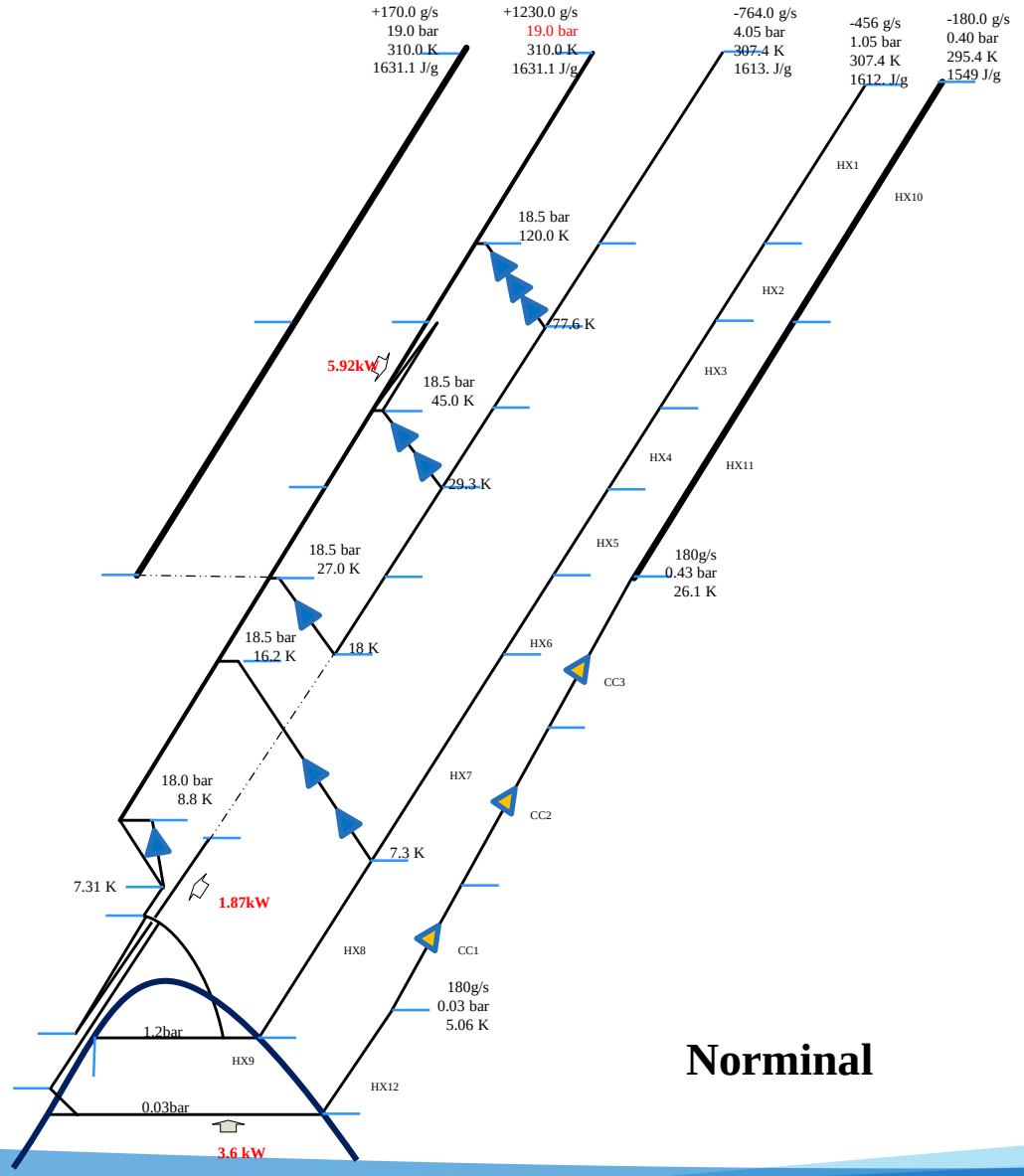

Norminal

Content

1. Requirement

2. Process design

3. Fullcryo Helium refrigerator

3、Fullcryo Helium refrigerator

氦液化器系列	FHL-40	FHL-70	FHL-100	FHL-140	FHL-180	FHL-240	FHL-280
液化率 L/h	40~70	70~100	100~140	140~180	180~240	240~280	280~310
压缩机额定功率 kW	75~90	90~132	132~160	160~200	200~250	250~315	315~355

氦制冷机系列	FHR-40	FHR-70	FHR-100	FHR-140	FHR-180	FHR-240	FHR-280
制冷量 W	160 ~250	250~320	320~450	450 ~580	580~750	750 ~900	900 ~1000
压缩机额定功率kW	75~90	90~~132	132~160	160~200	200~250	250~315	315~355

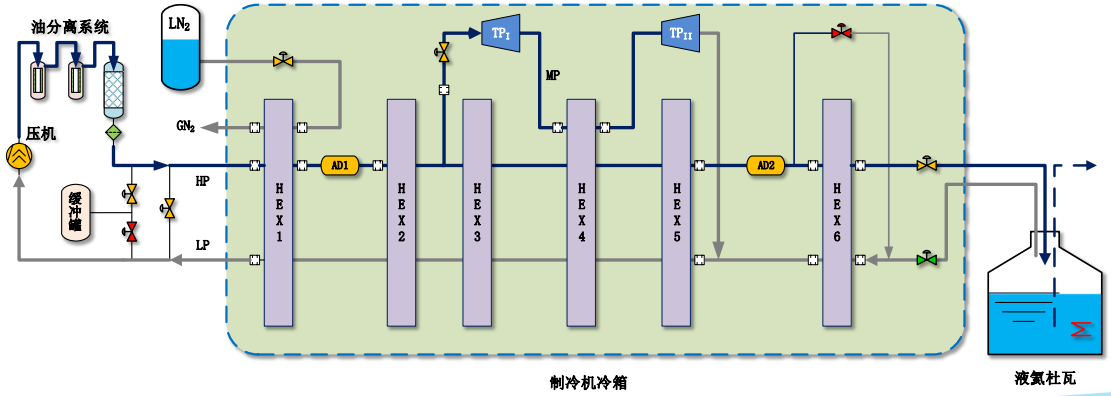

3、Fullcryo Helium refrigerator

1.5 TPD H2 liquefier

FHL-40/70/100/140/180/240/280
Helium refrigerator/liquefiers

3、Fullcryo Helium refrigerator

1.5 TPD H2 liquefier　　1000W @ 4.5K　　500W @ 4.5K

3、Fullcryo Helium refrigerator

10kW @ 20K

500W @ 4.5K

200W @ 4.5K

3、Fullcryo Helium refrigerator

1000W @ 4.5K for TIPC

3、Fullcryo Helium refrigerator

2500W @ 4.5K (500W @ 2K)

THANKS

www. fuhaicryo.com